공학석사학위논문

Finite Element Model Update by Optimizing Weighting Factors of Static and Dynamic Responses

정적 및 동적 응답 사이의 가중치 최적화를 통한 유한요소 모델 개선

2016년 2월

서울대학교 대학원

건설환경공학부

박 종 민

ABSTRACT

Finite Element Model Update by Optimizing Weighting Factors of Static and Dynamic Responses

Park, Jongmin
Civil and Environmental Engineering
The Graduate School
Seoul National University

This study performs a finite element model update using the natural frequency and lateral distribution factor acquired from an ambient vibration test on bridge in service. The more exact finite element model update was developed by optimizing the weighting factors of the static and dynamic responses. In this study, when updating the finite element model, the error in the lateral distribution factor is newly defined using a modal assurance criterion equation. Especially, it is important to optimize the weighting factor of static response, because static response is related to an evaluation of structure, load rating factor. The weighting factors of the lateral distribution factor and natural frequency can be optimized using a genetic algorithm which is known as finding the global solution well. The validity

of the proposed method is verified by using illustrative examples whose solutions are known. Also, the load rating factor is computed when the proposed method is applied to an existing bridge. The results show that the FE model update using both static and dynamic responses yields more exact solutions than the FE model update using either static or dynamic responses alone. Also, a finite element model update with optimized weighting factors can be performed more exactly by the proposed method.

Key words : Lateral Distribution Factor, Finite Element Model Update, Optimizing Weighting Factors, Static and Dynamic responses

Student Number : 2014-20542

Table of Contents

List of Figures

List of Tables

1 Introduction

1.1 Backgrounds and Literature Survey

With time, the bridge performance of the bridges that are in use deteriorates. Therefore, it is important to determine the current state of infrastructures such as bridges to maintain them efficiently and extend their service lives. There are various methods for determining the current states of bridges. For instance, field tests such as visual investigation and nondestructive testing are often used. However, more accurate analysis is needed for quantitative and qualitative bridge evaluation. For accurate analysis, it is possible to use a finite element (FE) model. Moreover, it is possible to get various types of information about a structure and evaluate its analyzing FE model.

Structure parameters such as the stiffness and unit weight from the FE models that were completed immediately after construction are different compared with the current ones. Bridge degradation is typically the reason. Indeed, measured data from the field testing of structures are different from the analysis values from an FE model. Therefore, it is necessary to update parameters such as stiffness and unit weight to accurately establish the current state of the structure. This

process is known as an FE model update. Measured data from field tests are used for the update, and vehicle loading tests are conducted for more accurate updating. It is possible to get static and dynamic data from static and dynamic loading tests, respectively. An FE model update is generally performed with dynamic data from dynamic field tests. However, it is more advantageous to use static as well as dynamic data. Ygee (2014) performed an FE model update with both static and dynamic data. Ygee (2014) also showed that using both types of data can improve the model update results. Hendrik (2009) used static data to reduce the risk of an ill-posed problem. Hendrik (2009) also used static data to update local information from nearby sensors. Do-Been Kim (2014) performed an FE model update using the lateral distribution factor (LDF) as static and dynamic data. Kim (2014) used the LDF as static information. The LDF was extracted from dynamic displacement to accurately evaluate the structure. According to above research, static and dynamic data are used to update static and dynamic parameters, respectively. Therefore, both static and dynamic data are needed to evaluate a structure.

Static and dynamic vehicle loading tests are conducted to measure static and dynamic data, respectively. However, both of these tests have the disadvantage of disturbing traffic flow. An ambient vibration test (AVT) is widely conducted to measure dynamic data without traffic control for bridges in use. Although

only dynamic data are obtained from an AVT and these are uncertain because load information is uncertain, the AVT is simple and has economic advantages. However, static data are also needed to update structure parameters more accurately. Accordingly, H. J. Kim (2013) extracted the lateral distribution factor (LDF), which is the one type of static information from dynamic displacement that can be used to update static parameters such as stiffness closely related to the structure evaluation (load rating factor). Kim (2013) extracted the LDF from dynamic displacement through an AVT using a low-pass filtering technique. Kim (2013) also eliminated a high-frequency component of the dynamic displacement using a low-pass filtering technique. Furthermore, Kim (2013) extracted low-frequency components as pseudo-static displacements.

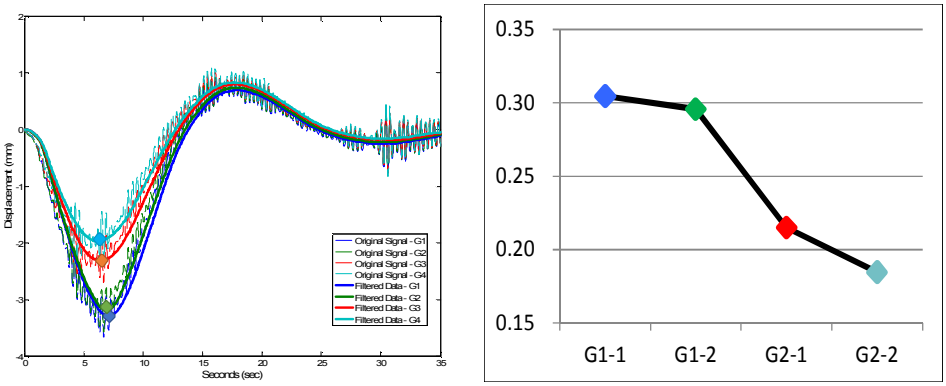

Figure 1 Example of Extracting LDF from Dynamic Displacement (Kim, 2013)

The LDF can be calculated with the pseudo-static

displacement obtained from the dynamic displacement using the following equation:

$$LDF_i = \frac{R_{\max,i}}{\sum_{i}^{N} R_{\max,i}} \tag{1}$$

where LDF_i is the lateral distribution factor for the i-th girder, $R_{\max,i}$ is the maximum measured response in i-th girder, and N is the number of girders. Do-Been Kim (2014) performed an FE model update using the LDF, dynamic data, and natural frequencies. Kim (2014) showed that the results of an FE model update with LDF are similar to the results of an FE model update using static displacement with respect to the load rating factor and a directivity parameter change. Therefore, it was shown that the LDF is the one type of static information that can be used in an FE model update.

An FE model update is widely performed using an optimization technique. An FE model update is the process of reducing discrepancies between measurement data and an FE model analysis in response to changing structure parameters. There could be a difference in the accuracy of structure parameters after updating an FE model. Therefore, it is necessary to construct an objective function for the optimization and to decide which optimization technique to use. An objective function comprises response errors, each of which is multiplied by a

weighting factor. Specifically, a weighting factor can be multiplied to a response error considering uncertainties in the measurement data. Hendrik (2009) constructed various objective functions with reciprocals of the standard deviations of measurement data as weighting factors. Li (2009) researched weight coefficients in various dynamic response errors. Li (2009) also applied various weight combinations for each response error to the FE model update. Furthermore, Li (2009) showed that different response errors should be multiplied by different weighting factors for a more accurate FE model update.

Accordingly, when an FE model update is performed with static and dynamic data, a weighting factor should be considered for each response error to update the structure parameters more accurately.

1.2 Research Objectives

The purpose of this study is to optimize the weighting factors of static and dynamic responses in the objective function. The LDF, which can be used as static information, is used in the FE model update instead of static data. Construction of an objective function will be proposed with LDF and dynamic responses, and their weighting factors will be optimized using an optimization technique. an FE model update process with weighting factor

optimization is verified by three illustrative examples and an application example, the Yeondae Bridge.

1.3 Overview of Dissertation

This study comprises six chapters. The contents are summarized as follows:

Chapter 1 provides the research background, literature survey, research objectives, and an overview of the dissertation. Chapter 2 describes how to update the structure parameters of an FE model. Moreover, the explanation of responses used in the FE model update and how to construct the objective function are included. In addition, how to use the LDF as static information in an FE model update, optimization techniques, and bridge evaluation methods are explained. In Chapter 3, the method of optimizing the weighting factors using a genetic algorithm is described. Formulation of the objective function used to optimize the weighting factors and optimization of the objective function using a genetic algorithm are also discussed. Chapter 4 provides the verification of the method using three illustrative examples that compare the results of the change of structure parameters. It also presents an application example, the Yeondae Bridge, and compares the load rating factors for the various cases. Finally, Chapter 5 concludes this research.

2 Finite Element Model Update by Using Actual Bridge Responses

2.1 Responses Used to Finite Element Model Update

As stated in the chapter 1, it is advantage to use both static and dynamic responses together to the FE model update for more accuracy. This chapter deals with responses that are supposed to use to a finite element model update.

2.1.1 Static Responses

Static displacements and strains are widely used to the FE model update as static responses. These responses are usually measured in the static vehicle loading test. Static displacement is a good response to update static information and parameters such like the stiffness of structure. Especially, the stiffness of structure is closely related to calculating load rating factor. Therefore, the stiffness of structure is updated more accurately for more accurate structure evaluation. For the bridges which are under use, the AVT is generally conducted for the reasons to reduce social cost. However, static responses can not be measured in the AVT. Therefore, it is needed for static

information such like an LDF to update the stiffness parameter more accurately. According to Kim (2013) and Kim (2014), an LDF is powerful response to update an FE model instead of static displacements. Thus, this research also uses an LDF as a static response instead of static displacement. Although the LDF is more uncertain than static displacement, it is easily measured from the AVT for bridges.

2.1.2 Dynamic Responses

Natural frequencies, mode shapes and modal flexibilities are representative dynamic reponses of structure. These responses can update global characteristics of structure, and extracted from dynamic data such like dynamic displacements and accelerations. Dynamic responses are widely used to FE model update compared to static data. Because dynamic data can be measured easily and contain the stiffness and mass information. Furthermore, for the bridges which are under use, dynamic data are easily measured with the AVT without traffic control.

2.2 Constructions of Objective Functions for Optimization

Constructing an objective function is really important process to

the FE model update. The results would be different in accordance with how to define response errors and multiply weighting factors to response errors. Therefore, this research apparently defines the definition of response errors and weighting factor in the objective function.

2.2.1 Definitions of Response Errors

It is important to define response errors in FE model update. Generally, response errors consist of measurement data and FE analysis reponses. There are various definitions of response error. This research uses Euclidean norm as a response error. It can be expressed the discrepancy between measurement data and FE analysis responses using Euclidean norm. Static and dynamic response errors are expressed by Euclidean norm in this research.

For dynamic data, natural frequency, the following equation is generally used to FE model update as a dynamic response error.

$$e_{frequency,i} = \frac{f_{measure} - f_{analysis}}{f_{measure}} \tag{2}$$

where $e_{frequency,i}$ is a dynamic response error, $f_{measruement}$ and $f_{analysis}$ are measured natural frequency and analyzed natural frequency, respectively. Using above dynamic response, the final dynamic response error expressing Euclidean norm as following:

$$e_{dyn} = \sqrt{\sum_{i=1}^{N_d} (e_{frequency,i})^2} \tag{3}$$

where e_{dyn} is the final dynamic response error and N_d is the number of modes.

For the static response, since this research use the LDF as a static response, this research would propose a new error form of static response. Details of the error of the LDF are described in chapter 2.3.

2.2.2 General Meanings of Weighting Factors

The weighting factor is the one of the important component of an objective function. Hendrik (2009) proposed a reciprocal of standard deviation as a weighting factor. Generally, weighting factors mean uncertainties of measurement data. Li (2009) suggested that different weighting factors should be multiplied to different responses, respectively. Therefore, when an FE model update is performed with static and dynamic data together, it is important to optimize weighting factors of static and dynamic responses which make structure parameters accurate.

In this research, the weighting factors mean minimizing a given objective function being weighed by static responses related to stiffness. The objective function would be optimized with optimization technique to optimize the weighting factor.

2.3 Alternative Response for Static Response

Kim (2014) suggested the LDF error in his research as following equation.

$$e_{LDF,i} = \left\| \frac{LDF_{m,i} - LDF_{a,i}}{LDF_{m,i}} \right\| \tag{4}$$

where $e_{LDF,i}$ is error of the LDF for i-th load case, $LDF_{m,i}$ and $LDF_{a,i}$ are the measured LDF and the FE model analysis LDF for i-th load case, respectively, and $\| \cdot \|$ is Euclidean norm. However, the LDF is a comparative value, which means that they affect one another, and above error is difficult to adapt to bridges with multi-girders. Thus, this research would propose a new error definition for the LDF.

2.3.1 Definition of Lateral Distribution Factor(LDF) Error

Kim (2014) used the LDF for an FE model update as a static information. However, the error of the LDF in his research is not proper for the bridges with multi-girders, and equation (4) does not express a comparative value among girders. Therefore, this research propose a new error form of the LDF expression.

As shown in figure 1, the LDF looks like a mode shape. Thus, this research would define the error of the LDF like equation of the mode shape error widely called as Modal Assurance Criterion (MAC).

$$MAC_j = \frac{(\phi_{m,j}{}^T \phi_{a,j})^2}{(\phi_{m,j}{}^T \phi_{m,j})(\phi_{a,j}{}^T \phi_{a,j})} \tag{5}$$

where $MAC_j (0 \le MAC_j \le 1)$ is a criterion generally defined as the error of mode shape, $\varnothing_{m,j}$ and $\varnothing_{a,j}$ are measured and analysis mode shape eigenvector, respectively, and j is the number of mode. The final error of the mode shape is defined as a following equation:

$$e_{MAC_j} = 1 - MAC_j \tag{6}$$

Lateral Distribution Factor Assurance criterion(LDFAC) would be proposed in this research as the error of the LDF. The equation of LDFAC is represented such like the equation of MAC.

$$LDFAC_j(\underline{x}) = \frac{(LDF_{m,j}{}^T LDF_{a,j}(\underline{x}))^2}{(LDF_{m,j}{}^T LDF_{m,j})(LDF_{a,j}(\underline{x})^T LDF_{a,j}(\underline{x}))} \tag{7}$$

where $LDFAC_j$ is the error of the LDF, $\underline{x}$ is structure parameter, $LDF_{m,j}$ and $LDF_{a,j}$ are measured and analyzed LDF, respectively, j is the number of LDFAC. As the analyzed LDF becomes the measured LDF closer, LDFAC is closer to 1 as same as MAC. The verification of LDFAC would be performed in the following chapter.

2.3.2 Verification of Lateral Distribution Factor Assurance

Criterion(LDFAC)

In this chapter, it is supposed to show the validity of LDFAC using a simple supported bridge with five-girders. Since this chapter is just shown the validity of LDFAC, the details of example bridge are supposed to deal with in chapter 4, illustrative example 2. Before updating an FE model, there exists discrepancy of LDF shape between measured and analyzed LDF in figure 2. After updating an FE model, updated LDF shape is closed to measured LDF shape in figure 3, and the error of LDF, $1-LDFAC$, is closer to 0 after updating an FE model than before updating an FE model in table 1.

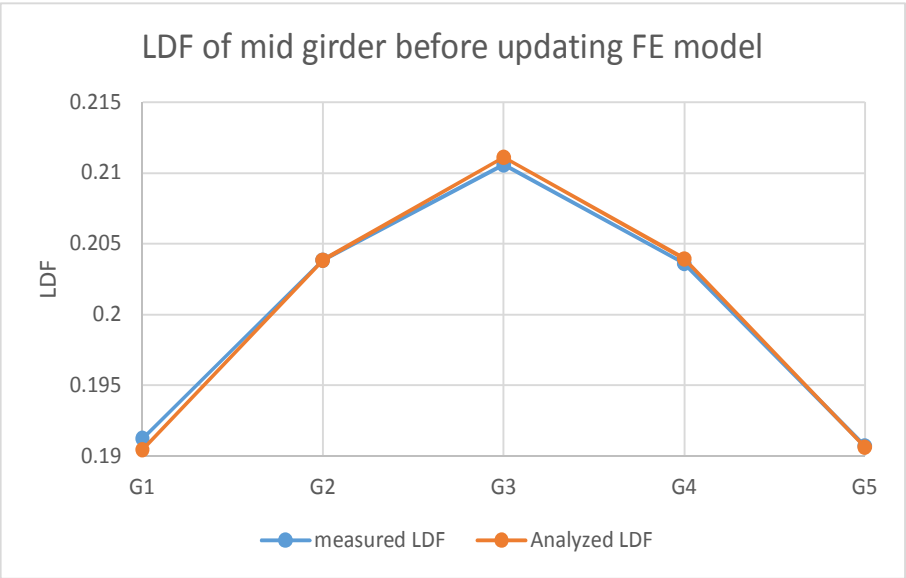

Figure 2 LDF of Mid-girder before Updating FE Model

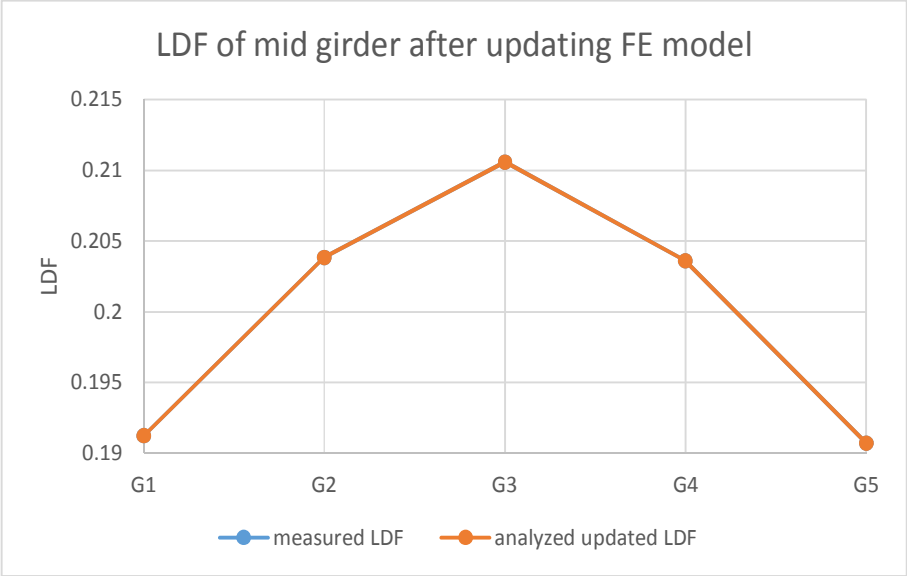

Figure 3 LDF of Mid-girder after Updating FE Model

Table 1 The Change of $1-LDFAC$

	Before updating	After updating
$1-LDFAC$	5.08E-06	9.40E-13

Through above figures and table, the error of LDF, $LDFAC$, is possible to use the response error as a static response error, because the value, $1-LDFAC$, becomes smaller after updating FE model.

2.4 Optimization Methods Used to Finite Element Model Update

An FE model update is performed with optimization techniques. Selecting which optimization technique is really important to the FE model update. Therefore, it is important to use a proper optimization technique to find out accurate structure parameters.

Tshilidzi (2010) compared various optimization techniques to update an FE model, Nelder-Mead simplex method, sequential quadratic programming technique and genetic algorithm etc. In this research, Sequential Quadratic Programming(SQP) would be selected to update an FE model.

2.4.1 Sequential Quadratic Programming

SQP is an optimization technique to update an FE model. SQP minimizes a quadratic representation of the objective function. (Tshilidzi Marwala, 2010)

Kim (2015) mentioned that SQP optimization technique can update an FE model and minimize the objective function. The SQP method have advantage which is powerful technique to converge to global optimal solution for unconstrained convex problem (Kim, 2015). However, an FE model update problem does not always have convex solution space. Therefore, there exist many local optimal solutions nearby initial points. However, the global optimal solution is not most proper solution in an FE model update problem (Zȧrate and Caicedo, 2008) in the physical

sense. Futhermore, even if the given FE model is eliminated with any uncertainties and credible model which is modeled right after construction, the local optimum solution nearby initial structure parameter is more proper in the physical meaning.

2.5 Assessment of Structural Condition

As stated in previous chapters, an FE model is used to evaluate the structure state. It can evaluate the structure condition using an updated FE model. Load rating factor is the one of quantitative evaluation index. It can evaluate the structure using load rating factor.

2.5.1 Load Rating Factor Evaluation

General load rating factor equation is shown in AASHTO LRFR (2011). When the structure is loaded a single force effect, the load rating factor equation is as follow in AASHTO LRFR (2011):

$$RF = \frac{C - (\gamma_{DC})DC - (\gamma_{DW})DW \pm (\gamma_P)P}{(\gamma_{LL})(LL + IM)} \tag{8}$$

where C is a capacity of structure, DC , DW and P are dead load for structural components, wearing surface and permanent load, respectively, and LL and IM are live load and dynamic

load, respectively. γ_{DC}, γ_{DW}, γ_{P} and γ_{LL} are LRFD load factor for structural component, wearing surface, permanent load and live load, respectively.

Load rating factor can be calculated by the analyzed results after updating an FE model. Therefore, accurate structure evaluation can be performed with accurate FE model update results.

3 Optimization of Weighting Factors for Finite Element Model Update

As stated in previous chapters, this research deal with the LDF as a static information and natural frequency as a dynamic response for bridges which are under use to update FE model reflecting a current state of structure. This chapter deals with how to optimize weighting factors to minimize an objective function. Therefore, an objective function should be defined first, and it is supposed to describe how to optimize a weighting factor.

3.1 Formulation of the Objective Function for Finite Element Model Update

The objective function is compromised response error and weighting factors multiplied to each responses. It is important how to construct the objective function, since the results after updating an FE model vary according to how to construct the objective function. Therefore, this research deal with how to construct objective function with LDF, natural frequency and weighting factors.

With static response error, LDFAC, and dynamic response error, it is possible to construct the objective function being supposed to use in this research. Equation (9) is the objective function compromised with static and dynamic responses errors and weighting factors of static and dynamic responses.

$$J(\underline{x};\alpha)=\frac{1}{N_s}\sqrt{\sum_{j=1}^{\text{sensor}}(1-LDFAC_j(\underline{x}))^2}+\frac{\alpha}{1-\alpha}\frac{1}{N_d}\sqrt{\sum_{j=1}^{\text{mode}}(\frac{f_{m,j}-f_{a,j}(\underline{x})}{f_{m,j}})^2} \quad (9)$$

where $J(\underline{x};\alpha)$ is the objective function, $\underline{x}$ is structure parameter which would be updated, α is weighting factor for dynamic response and $1-\alpha$ is weighting factor for static response, respectively. $f_{m,i}$ and $f_{a,i}$ are measured and analyzed natural frequencies, and N_s and N_d are the number of $LDFAC$ and mode, respectively.

Each response error is defined in a form of Euclidean norm. Also, weighting factor, $\frac{\alpha}{1-\alpha}$ affect the objective function as a regularized factor. That is, the above equation is focused to minimize static response error closely related to load rating factor.

3.2 Sensitivity Check of Static and Dynamic Response Error of the Objective Function

For the given objective function in chapter 3.1, the change of each response according to the change of structure parameter is important. Because the purpose of the optimizing process is to minimize the objective function, the response which has bigger sensitivity than the other is dominant response of optimization. However, as stated in previous chapter, static data closely related to load rating factor, one of the structure evaluation index, is important. That is, the final weighting factor can make the static response error dominantly minimized. The sensitivity of objective function which is defined above chapter should be checked.

Each response sensitivity is calculated using the following equations:

$$S_{static} = \frac{\frac{1}{N_s}\left(\sqrt{\sum_{j=1}^{sensor}(1-LDFAC_j(\underline{x}+dP))^2} - \sqrt{\sum_{j=1}^{sensor}(1-LDFAC_j(\underline{x}))^2}\right)}{dP} \tag{10}$$

$$S_{dynamic} = \frac{\frac{1}{N_d}\left(\sqrt{\sum_{j=1}^{mode}\left(\frac{f_{m,j}-f_{a,j}(\underline{x}+dP)}{f_{m,j}}\right)^2} - \sqrt{\sum_{j=1}^{mode}\left(\frac{f_{m,j}-f_{a,j}(\underline{x})}{f_{m,j}}\right)^2}\right)}{dP} \tag{11}$$

where S_{static} and $S_{dynamic}$ are the sensitivities of static and dynamic responses, respectively, and dP is an increment of structure parameter. For the given objective function which is defined in chapter 3.1, $S_{dynamic}$ is bigger than S_{static}. That is, when an FE model update is performed using the given objective function which is defined above, the objective function is mainly

minimized by minimizing dynamic response error. It is incorrect to the purpose which is evaluating structure. Therefore, FE model update should be performed by optimizing proper weighting factors of static and dynamic responses.

3.3 Optimizing Weighting Factor using Genetic Algorithm

In this research, genetic algorithm is used as a method of optimizing weighting factors of static and dynamic responses. An FE model update can be performed to minimize the objective function and discrepancy between measurement and analysis values using genetic algorithm and SQP updating structure parameter and weighting factor.

Genetic Algorithm(GA) is used in this research to determine weighting factors of static and dynamic responses. Weighting factor(α) in the given objective function, equation (9), is a variable. The final weighting factor would be optimized to minimize the objective function. That makes the discrepancy between measurement and analyzed responses minimized. Therefore, this research determined weighting factor using optimization technique. The objective function used in optimization process is same to equation (9).

Genetic Algorithm(GA) is generally known as finding global solution well. However, GA spends high cost to optimization process. The problem of optimizing weighting factors is easy to converge to local solutions nearby initial points, so it is not proper to use gradient optimization methods. Therefore, using genetic algorithm which can find global solutions is really advantage to the problem to optimize weighting factors although it spends a lot of cost.

3.4 Overall Framework of Finite Element Model Update with Optimization of Weighting Factors

As stated in the previous chapter, weighting factors are optimized with genetic algorithm. Entire FE model update process is the following figure. It is a purpose to minimize the objective function optimizing weighting factors with genetic algorithm and structure parameters with SQP algorithm.

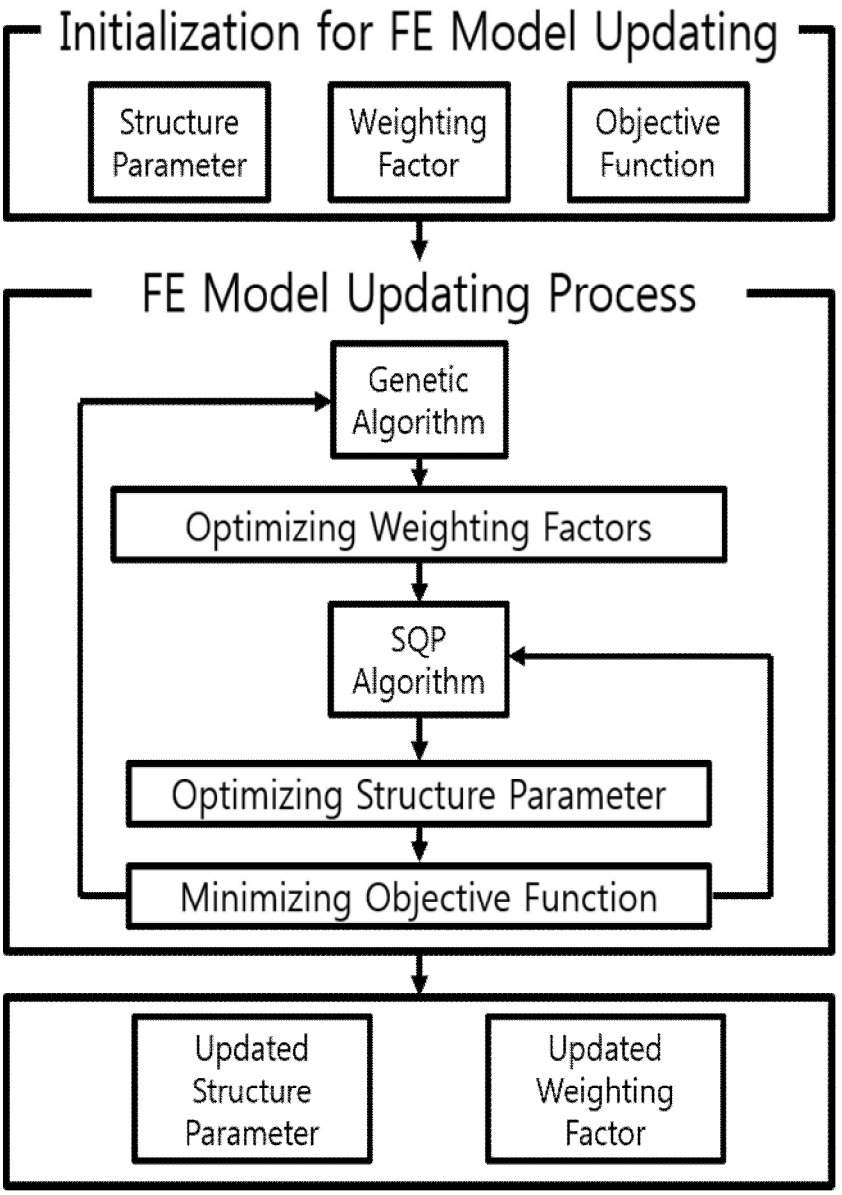

Figure 4 The Overall Framework of Finite Element Model Update with Optimizing Weighting Factors

4 Examples for Verification of Method

This chapter deals with the verification of a proposed method for the FE model update optimizing weighting factor. It is the best verification example to verify the method using real bridges. However, the exact solutions of real bridges can not be measured in the real sense. That is, the proposed method can not be verified how exact it is. Therefore, the various illustrative bridges which have the exact solutions are used in this research. And although the exact solutions are not known, applicability would be checked by applying to real bridge, Yeondae bridge.

4.1 Descriptions of Illustrative Examples

In this research, three virtual bridges are used to verify the proposed method. The virtual bridges are constructed to check how exactly updated parameters are updated to exact solutions. And simple and ideal bridges are modeled with girders and cross beams to compare the results after updating structure parameters with respect to optimizing weighting factors. Three virtual bridges are single span bridge with 2-girders (Case study 1), single span bridge with 5-girders (Case study 2) and two-spans bridge with 5-girders(Case study 3).

The process of optimizing and analyzing the structures spends high cost and time. Therefore, a new analysis code on MATLAB which can analyze modal analysis and frame structure would be used to optimize and analyze the example structure. The results of analyzing the structure with MATLAB code were compared to the results from MIDAS Civil 2012 to check the validity of MATLAB analysis code.

4.1.1 Common Features of Examples

To analyze the illustrative example structures, some features are commonly set about the example structures.

Firstly, the structure parameters which would be updated of virtual example structures are identical to each examples. There are two parameters which would be updated, Elastic modulus(E) and unit weight(w). These two parameters are represented about the behavior of structures. Elastic modulus is represented about the change of stiffness and unit weight is represented about global behavior of structure, respectively.

Elastic modulus(E) is a representative value of determining stiffness of structure. There are many structure parameter such like section modulus, I_{xx}, I_{yy}, A, J, and shear modulus, G, and poisson ratio, υ, etc. besides elastic modulus. However, in this research, elastic modulus is selected to represent stiffness of

structure as a stiffness value which would be updated. Assume that section modulus and poisson ratio is same after updating FE model. Then, the change of stiffness of structure can be represented with the change of elastic modulus(E). The shear modulus is also represented with elastic modulus.

As stated, unit weight(w) is represented about global behavior of structure. Even if the section modulus are same after updating, the change of mass properties of structure is same with the change of unit weight. Therefore, unit weight would be selected to check global behavior of structure after updating an FE model.

Secondly, the responses which would be used to the FE model update are the LDF and natural frequency, a representative value of dynamic response. The LDF is the one of static reponses and natural frequency is the one of dynamic responses. The LDF from dynamic displacement is similar to the LDF from static displacement (Kim, 2013). For this reason, this research uses the LDF from static displacement loading static load to structure. Natural frequency can update the stiffness and mass component of structure in a global sense and the LDF can update the stiffness of structure in a local sense nearby sensors. Therefore, it is advantage to use LDF, one of static responses, and natural frequency, one of dynamic responses, to FE model update together. In this research, one LDFAC value and natural

frequencies up to 5-th modes are used.

Final common feature is the objective function which be used to FE model update. The objective function can be represented as following equation:

$$J(\underline{x};\alpha)=\sqrt{(1-LDFAC(\underline{x}))^2}+\frac{\alpha}{1-\alpha}\frac{1}{5}\sqrt{\sum_{j=1}^{5}\left(\frac{f_{m,j}-f_{a,j}(\underline{x})}{f_{m,j}}\right)^2} \qquad (12)$$

And boundaries of all examples are simple supported.

4.1.2 Case Study 1: Single Span Bridge with 2-girders

The structure parameters for case 1 are elastic modulus and unit weight for each girders, in Table 2.

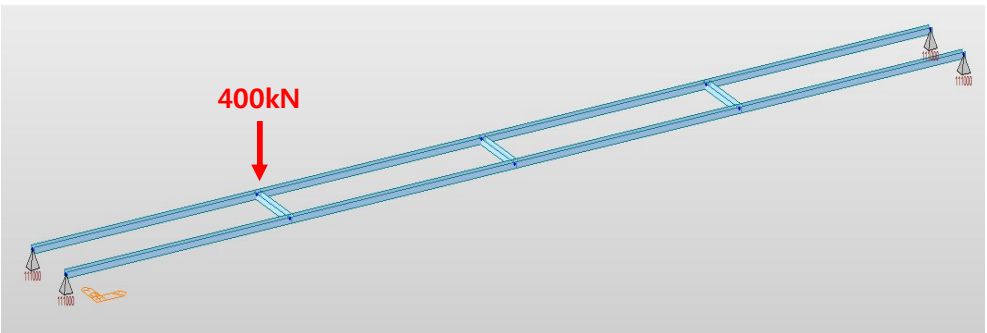

Figure 5 Illustrative Example for Case Study 1

Table 2 The Exact Parameters of Illustrative Example 1

Girder No. #	Elastic Modulus(E) (Tonf/mm^2)	Unit Weight(w) (Tonf/mm^3)
1	19.95	8.09E−09
2	19.80	8.12E−09

Table 3 The Initial Parameters before Updating

Girder No. #	Elastic Modulus(E) (Tonf/mm^2)	Unit Weight(w) (Tonf/mm^3)
1	21	7.85E−09
2	21	7.85E−09

Used measured structure responses are as following:

Table 4 Natural Frequencies of Case 1

The number of mode	Measured Natural frequency(Hz)	Analyzed Natural frequency(Hz)
1	16.9659	17.7039
2	31.3489	32.7125
3	40.9593	42.7410
4	124.3920	129.8029
5	229.8457	239.8444

Table 5 LDF of Middle of Span for Case 1

Girder No. #	Measured LDF	Analyzed LDF
1	0.999413	0.999506
2	0.000587	0.000494

4.1.3 Case Study 2: Single Span Bridge with 5-girders

The proposed FE model update method which select weighting factor is verified with single span 5-girders bridge as follow:

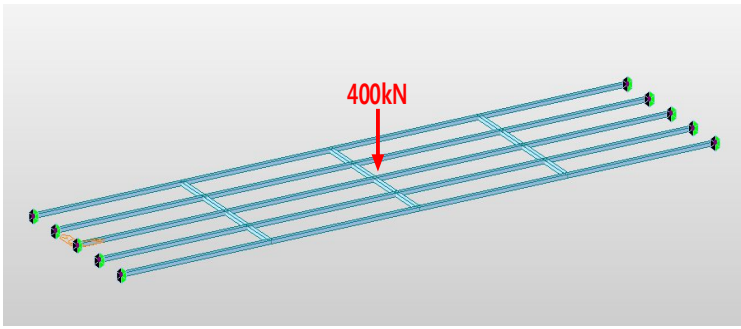

Figure 6 Illustrative Example for Case Study 2

The structure parameters of above bridge which would be updated are elastic modulus and unit weight for each girder, that is, 5 elastic modulus and 5 unit weights are used.

Table 6 The Exact Parameters of Illustrative Example 2

Girder No. #	Elastic Modulus(E) (Tonf/mm^2)	Unit Weight(w) (Tonf/mm^3)
1	19.95	8.09E−09
2	19.80	8.12E−09
3	20.37	8.13E−09
4	19.90	8.07E−09
5	20	8.15E−09

Table 7 The Initial Parameters of Example before Updating

Girder No. #	Elastic Modulus(E) (Tonf/mm^2)	Unit Weight(w) (Tonf/mm^3)
1	21	7.85E−09
2	21	7.85E−09
3	21	7.85E−09
4	21	7.85E−09
5	21	7.85E−09

The static load is loading to mid−span for 3−th girder by 400kN and the boundary condition is simple supported. Used structure responses are as following:

Table 8 Natural Frequencies of Case 2

The number of mode	Measured Natural frequency(Hz)	Analyzed Natural frequency(Hz)
1	16.6565	17.3232
2	30.7772	32.0090
3	40.2123	41.8218
4	122.1218	127.0092
5	225.6441	234.6713

Table 9 LDF of Middle of Span for Case 2

Girder No. #	Measured LDF	Analyzed LDF
1	0.191242	0.190458
2	0.203861	0.203858
3	0.210571	0.211094
4	0.203597	0.203949
5	0.190729	0.190641

4.1.4 Case Study 3: Two Spans bridge with 5-girders

The proposed FE model update method which select weighting factor is verified with two span 5-girders bridge as follow:

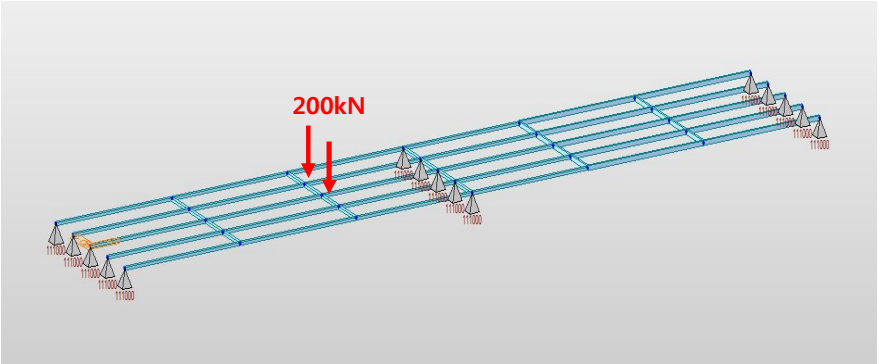

Figure 7 Illustrative Example for Case Study 3

The structure parameters are same to Table (6) and (7) in 4.1.3, and measured structure responses used are as following:

Table 10 Natural Frequencies of Case Study 3

The number of mode	Exact Natural frequency(Hz)	Analyzed Natural frequency(Hz)
1	21.7627	22.6338
2	21.7627	22.6338
3	37.6941	39.2029
4	37.6941	39.2029
5	159.5583	165.9432

Table 11 LDF of Middle of Span for Case Study3

Girder No. #	Measured LDF	Analyzed LDF
1	0.266944	0.264938
2	0.269681	0.270101
3	0.234077	0.235474
4	0.158241	0.158886
5	0.071057	0.070601

4.2 Results of Illustrative Examples

In this chapter, Root Mean Square Errors(RMSEs) of updated parameters, elastic modulus and unit weight, are used to compare the results to exact solution.

$$RMSE = \sqrt{\frac{\sum_{i=1}^{N} e_i^2}{N}} \tag{13}$$

The case updating FE model with static or dynamic data only, respectively, static and dynamic data together which are weighed by 1:1($\alpha = \frac{1}{2}$) for the weighting factor and FE model update process with the proposed method are compared. For these cases, it can be find out that it is more accurate to use static

and dynamic data together than use just one data, static or dynamic, and optimizing weighting factors is more accurate than weighting factors being weighed by 1:1 for static and dynamic responses.

4.2.1 The Results of Case Study 1

The accuracy of the structure parameters, elastic modulus and unit weight, of virtual bridge, case 1. The results of weighting factor(α) calculated with the proposed method is 1.5318E−05. The change of parameters and RMSEs are shown in next table (12)~(15).

Table 12 The Change of Elastic Modulus of Case 1

(Ton/mm^2)

Used data (weighting factor)	Girder 1	Girder 2
Static	21.278	20.722
Dynamic	20.140	20.137
Static and dynamic ($\alpha = \frac{1}{2}$)	20.138	20.139
Static and dynamic ($\alpha = 1.5318^{-5}$)	20.056	20.052

The RMSEs of elastic modulus are shown as following:

Table 13 The RMSE of Elastic Modulus of Case 1

Used data (weighting factor)	RMSE
Static	5.7438E−02
Dynamic	1.3803E−02
Static and dynamic ($\alpha = \frac{1}{2}$)	1.3818E−02
Static and dynamic ($\alpha = 1.5318^{-5}$)	9.7507E−03

Table 14 The change of unit weight of Case 1

(x10^{-09} Ton/mm^3)

Used data (weighting factor)	Girder 1	Girder 2
Static	7.846	7.947
Dynamic	8.217	8.222
Static and dynamic ($\alpha = \frac{1}{2}$)	8.217	8.222
Static and dynamic ($\alpha = 1.5318^{-5}$)	8.181	8.185

The RMSEs of unit weight are shown as following:

Table 15 The RMSE of unit weight of Case 1

Used data (weighting factor)	RMSE
Static	2.6084E−02
Dynamic	1.4182E−02
Static and dynamic ($\alpha = \frac{1}{2}$)	1.4179E−02
Static and dynamic ($\alpha = 1.5318^{-5}$)	9.713E−03

For elastic modulus, the change of parameters of each girders is compared to the proposed method and weighing same weighting factor method.

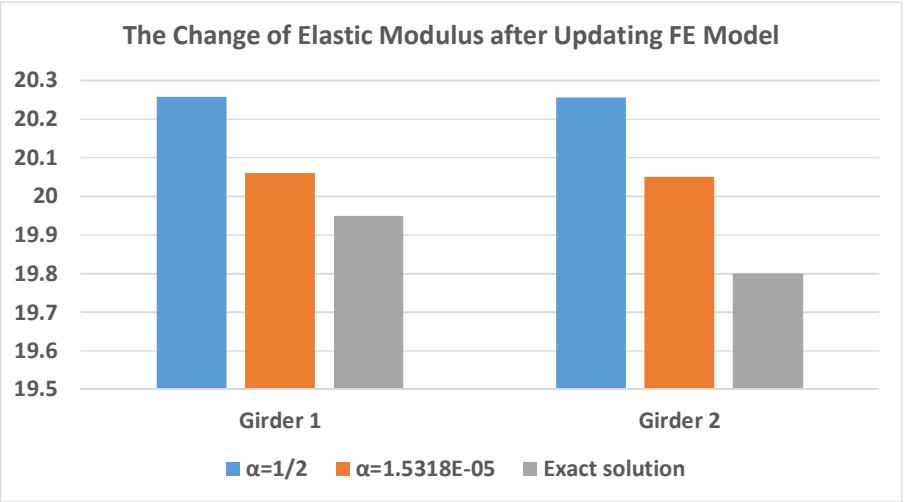

Figure 8 The Change of Elastic Modulus after Updating FE Model for Case 1

For the case 1, the results after updating FE model with

proposed method are closer to the exact solutions.

4.2.2 The Results of Case Study 2

The accuracy of the structure parameters, elastic modulus and unit weight, of virtual bridge, case 2. The results of weighting factor(α) which is calculated with the proposed method is 6.1035E−05. That means weighing the bigger weighting factor to static data than dynamic one. The change of parameters is shown in next table (16)~(19).

Table 16 The change of elastic modulus of Case 2

(Ton/mm^2)

Used data (weighting factor)	Girder 1	Girder 2	Girder 3	Girder 4	Girder 5
Static	19.711	20.607	21.288	20.645	19.782
Dynamic	20.028	20.119	20.174	20.129	20.061
Static and dynamic ($\alpha = \frac{1}{2}$)	20.004	20.108	20.175	20.138	20.081
Static and dynamic ($\alpha = 6.1035^{-5}$)	19.859	20.022	20.237	20.083	19.930

The RMSEs of elastic modulus are shown as following:

Table 17 The RMSE of elastic modulus of Case 2

Used data (weighting factor)	RMSE
Static	3.2724E−02
Dynamic	1.0083E−02
Static and dynamic ($\alpha = \frac{1}{2}$)	1.0003E−02
Static and dynamic ($\alpha = 6.1035^{-5}$)	7.5582E−03

Table 18 The change of unit weight of Case 2

(x10^{-09} Ton/mm^3)

Used data (weighting factor)	Girder 1	Girder 2	Girder 3	Girder 4	Girder 5
Static	7.908	7.873	7.857	7.871	7.906
Dynamic	8.174	8.150	8.143	8.145	8.169
Static and dynamic ($\alpha = \frac{1}{2}$)	8.172	8.149	8.143	8.146	8.169
Static and dynamic ($\alpha = 6.1035^{-5}$)	8.118	8.121	8.131	8.119	8.122

The RMSEs of unit weight are shown as following:

Table 19 The RMSE of unit weight of Case 2

Used data (weighting factor)	RMSE
Static	2.8524E−02
Dynamic	6.5699E−03
Static and dynamic ($\alpha = \frac{1}{2}$)	6.4983E−03
Static and dynamic ($\alpha = 6.1035^{-5}$)	3.4877E−03

For using static and dynamic data together to FE model update, the change of parameters, elastic modulus which is closely related to evaluation of structures than unit weight, are shown by graph as following.

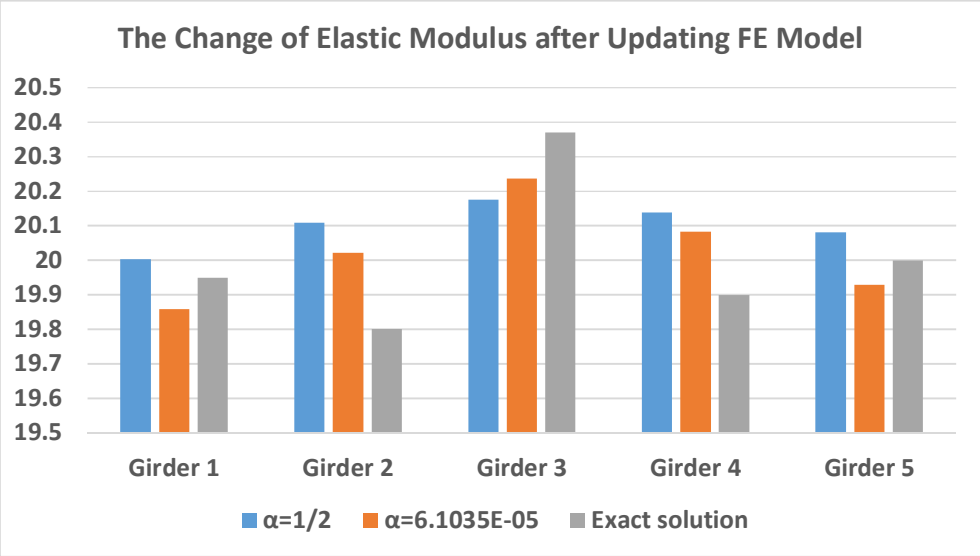

Figure 9 The Change of Elastic Modulus after Updating FE Model for Case 2

The parameters after updating FE model of each girder using proposed method are almost closer to the exact solutions than the results using weighing same weighting factors to static and dynamic responses.

4.2.3 The Results of Case Study 3

The accuracy of the structure parameters, elastic modulus and unit weight, of virtual bridge, ase 3. The results of weighting factor(α) calculated with the proposed method is 6.2370E−03. It is also weighing the bigger weighting factor to static data than dynamic one. The change of parameters and RMSEs are shown

in next table (20)~(23).

Table 20 The change of elastic modulus of Case 3

(Ton/mm^2)

Used data (weighting factor)	Girder 1	Girder 2	Girder 3	Girder 4	Girder 5
Static	20.837	20.472	20.810	20.975	20.960
Dynamic	20.018	20.115	20.171	20.125	20.055
Static and dynamic ($\alpha = \frac{1}{2}$)	19.967	20.088	20.164	20.141	20.082
Static and dynamic ($\alpha = 6.2370^{-3}$)	19.993	19.816	20.162	20.157	19.934

The RMSEs of elastic modulus are shown as following:

Table 21 The RMSE of elastic modulus of Case 3

Used data (weighting factor)	RMSE
Static	4.2006E−02
Dynamic	9.9475E−03
Static and dynamic ($\alpha = \frac{1}{2}$)	9.7716E−03
Static and dynamic ($\alpha = 6.2370^{-3}$)	7.5851E−03

Table 22 The change of unit weight of Case 3

(x10^{-09} Ton/mm^3)

Used data (weighting factor)	Girder 1	Girder 2	Girder 3	Girder 4	Girder 5
Static	8.277	8.203	8.099	7.967	7.846
Dynamic	8.174	8.147	8.138	8.142	8.168
Static and dynamic ($\alpha = \frac{1}{2}$)	8.159	8.142	8.142	8.143	8.164
Static and dynamic ($\alpha = 6.2370^{-3}$)	8.130	8.105	8.100	8.109	8.135

The RMSEs of unit weight are shown as following:

Table 23 The RMSE of unit weight of Case 3

Used data (weighting factor)	RMSE
Static	2.1002E−02
Dynamic	6.3741E−03
Static and dynamic ($\alpha = \frac{1}{2}$)	5.7675E−03
Static and dynamic ($\alpha = 6.2370^{-3}$)	3.6823E−03

For elastic modulus as same reason as 4.2.1, the change of parameters of each girders is compared to the proposed method and weighing same weighting factor method.

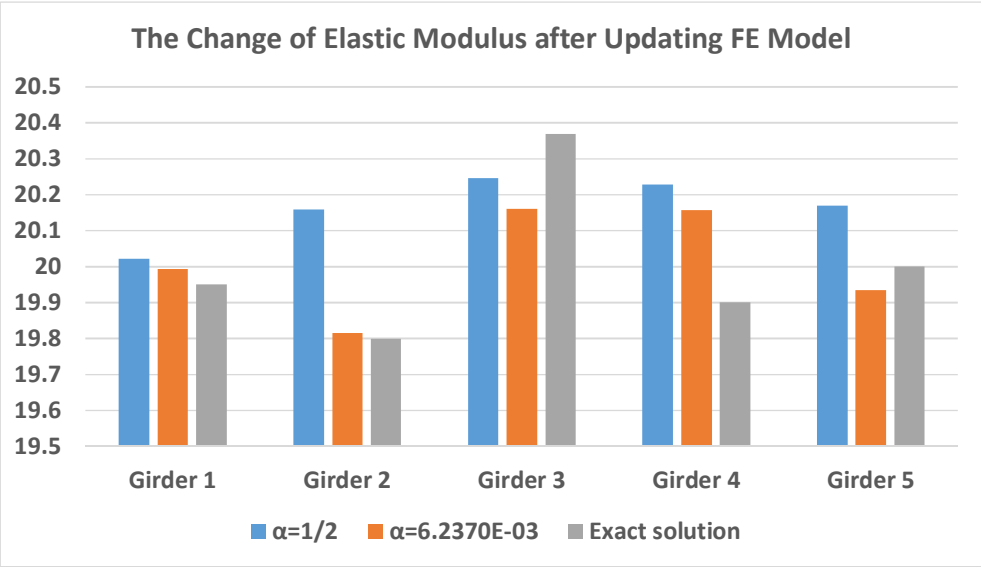

Figure 10 The Change of Elastic Modulus after Updating FE Model for Case 3

For the case 3, the results after updating FE model with proposed method are closest to the exact solutions.

4.3 Summary of Results

According to the results of the FE model update above, static and dynamic data have to be used together to update the FE model accurately. When using one data alone, static or dynamic data, to FE model update, the errors are bigger than using both static and dynamic data. Especially, when using only static data to FE model update, the dynamic parameters, unit weight, are not updated correctly. As the results, static and dynamic data are used together to update FE model accurately. However, the results of FE model update using dynamic data are similar to the results of using static and dynamic data which are weighed by same weighting factor. That means dynamic data is dominant in optimizing process when updating FE model. The reason is why dynamic reponses are more sensitivity than static responses for the given objective function as stated in 3.2. The structure parameters of updating FE model using proposed method are closest to the exact solutions and RMSEs from the proposed method are smallest for the other examples.

The weighting factor(α) is smaller than $\frac{1}{2}$ for all cases. That

means weighting factor is more weighed to static responses not dynamic responses for the given objective function. The dynamic response error term, regularizing term, has to be evaluated smaller than static response error term.

4.4 Numerical Example : Yeondae Bridge

This chapter contains the verification of the proposed method with application example, Yeondae bridge. It is located in a road section of expressway 45 in South Korea for a test. The method of optimizing weighting factors would be verified to apply to real bridge.

4.4.1 Description of Application Example : Yeondae Bridge

The bridge is a steel-box girder bridge. The bridge consists of continuous 4 spans. Each span length is 45m. The vehicle loading tests were conducted on March 31st, static and dynamic loading tests. The tests were conducted to identify the bridge state. An ambient vibration test was also conducted without traffic control. The results from the tests would be used to verify that the method can be applied to real bridges.

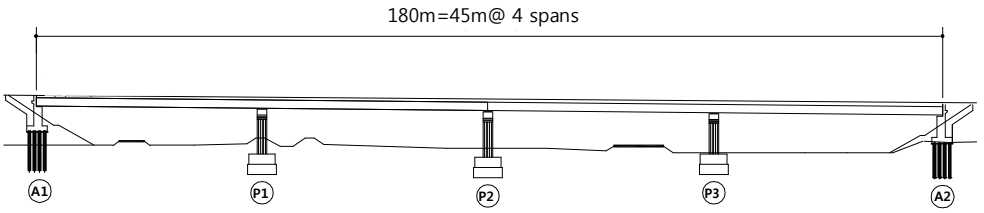

Figure 11 The Side View of Yeondae bridge

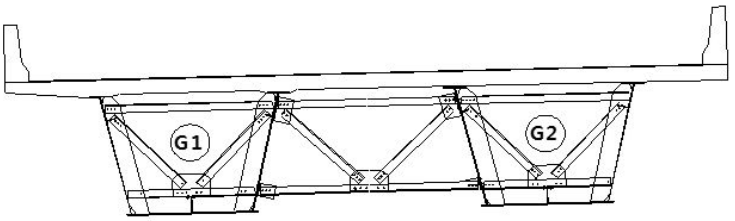

Figure 12 The Sectional View of Yeondae Bridge

4.4.2 Finite Element Model Update by Optimizing Weighting Factor

an FE model update is performed with the LDF and natural frequencies. The objective function is formulated as follow:

$$J(\underline{x};\alpha) = \sqrt{(1-LDFAC(\underline{x}))^2} + \frac{\alpha}{1-\alpha}\frac{1}{3}\sqrt{\sum_{j=1}^{3}\left(\frac{f_{m,j}-f_{a,j}(\underline{x})}{f_{m,j}}\right)^2} \qquad (14)$$

The number of structure parameters is 37, spring stiffness, elastic modulus and mass for each girder etc., and SAP 2000 is used as an analysis program linked with MATLAB which operates optimization process. SQP algorithm is used to update structure parameters and genetic algorithm is used to optimize

weighting factor.

4.4.3 Evaluation of Load Rating Factor : Yeondae Bridge

For the Yeondae bridge, the exact solution is unknown. Therefore, the validity of proposed method would be checked by comparing the load rating factor of FE model update with various data. For instance, the static displacement from static vehicle loading test is more proper value than LDF from dynamic tests. Assume that the load rating factor of FE model update with static displacement and natural frequency is the exact solution, comparing the results of proposed method to the FE model update results with dynamic only or static displacement and natural frequency.

There are four cases of FE model update using various data. The FE model update with static displacement and natural frequency is case 1, the FE model update with LDF and natural frequency weighed same weighting factors is case 2 and the FE model update with only natural frequency is case 3. The FE model update with the proposed method is case 4.

The results are as following:

Table 24 Used Data to FE Model Update for Each Case

	Used Data(Weighting Factor)
Case 1	Static Displacement + Natural Frequency
Case 2	Lateral Distribution Factor + Natural Frequency($\alpha = \frac{1}{2}$)
Case 3	Natural Frequency
Proposed Method	Lateral Distribution Factor + Natural Frequency($\alpha = 0.0179$)

Table 25 The Load Rating Factor for Each Case

	Load Rating Factor
Case 1	2.095
Case 2	2.402
Case 3	2.426
Proposed Method	2.120

Assuming that the result on case 1, the FE model update with static displacement, is the exact solution, the result of proposed method is closer to the exact solution than case 2 and 3. The results on case 2 and 3 are almost same like illustrative examples. Also, the weighting factor from proposed method is less than 0.5.

5 Conclusion

This research proposes that updated parameters can lead to more accurate solution by optimizing the weighting factors of static and dynamic responses. And, this research performed that an FE model update was performed using the natural frequency and lateral distribution factor from ambient vibration test results.

The lateral distribution factor extracted from dynamic data and the natural frequency measured by ambient vibration test for bridges in-service are employed in the FE model update. The LDF error is defined as like modal assurance criterion equation in this process, and a new optimization objective function is defined in the form of a Euclidean norm.

Static responses directly affect the structural evaluation such like calculating load rating factor. Optimizing the weighting factors of static and dynamic responses to maximize the effect of the optimization process is performed to update an FE model and evaluate the bridge more exactly.

The findings from the illustrative examples and the application to in-service bridge are as follows:

- In the examples, using static and dynamic data for an FE model update is more effective than using only one type of data.

- In the illustrative examples, the structure parameters converge to the exact solutions after an FE model update using the proposed method.

- In the application example, the Yeondae Bridge, the load rating factor using the proposed method is similar to that obtained using the static displacement and natural frequency. This means that an FE model update can be performed more accurately using the proposed method in case the static displacement cannot be measured.

- When applying the same weighting factors to static and dynamic data, the result is somewhat more accurate than by using dynamic data only. This shows that the effect of using both static and dynamic data in an FE model update is minimal.

- In the objective function, the dynamic response error term works as a penalty function in the optimization process. This means that the optimization focuses on minimizing the static response error.

- In the results of the weighting factor optimization, all of the weighting factors(α) are less than 0.5. This implies that the static response has to be more heavily weighted than the dynamic response in the given objective function.

For a bridge in-service, an FE model update is performed using static and dynamic data, the lateral distribution factor, and

natural frequency. The weighting factors of each response are optimized using a genetic algorithm. With the proposed method, the structure parameters can be updated and the structure can be evaluated using a load rating factor more accurately. Finally, as a challenge, the noise level and uncertainty of data and static information could be applied to the proposed method instead of the LDF for a girderless bridge.

References

AASHTO LRFR. The Manual For Bridge Evaluation. American association of state highways transportation officials, DC, Washington. 2011

Anil K. Chopra. Dynamics of Structures. 4-th eidition. Boston: PEARSON, 2012

Bijaya Jaishi and Wei-Xin Ren. Structural Finite Element Model Updating Using Ambient Vibration Test Results. ASCE. 2005. 131:4(617)

Do-Been. Kim.; Hyun-Joong. Kim.; Seungwon. Noh.; Hyun-Moo. Koh.; Updating FE Model Using Lateral Distribution Factor and Assessment of Load Carrying Capacity. KSCE, 2014; 91-92

H. J. Kim.; H.-K. Kim.; J. Park.; H.-M. Koh.; J.-Y. Cho. Estimation of Load Distribution Factor for Girder Bridges from Ambient Vibration Data using Clustering Technique. SHMII-6, 2013

Hendrik Schlune.; Mario Plos.; Kent Gylltoft. Improved bridge evaluation through finite element model updating using static and dynamic measurements. Engineering Structures, 2009; 31(2009):1477-1485.

Hyun-Joong Kim. Probabilistic Assessment of Structural Condition through Clustering-based Multiple FE Model Update. Seoul National University, 2015

Li Jie.; Huang Min-shui.; Ahu Hong-ping. Study on Different Residual and Weight Coefficient in Model Updating of Bridge Structure. ASCE(2009); 100-107

Paul T. Boggs and jon W. Tolle. Sequential Quadratic Programming. Acta Numrica, Volume 4. 2008; 1-51

Tshilidzi Marwala. Finite-element-model Updating Using Computaional Intelligence Techniques. Natick; Springer, 2010

Xinghua Chen.; Piotr Omenzetter.; Sherif Beskhyroun. Ambient vibration testing, system identification and model updating of a multiple-span elevated bridge. EURODYN 2014. ISSN: 2311-9020

Ygee P. Larion. Bridge Model Updating Using Static and Dynamic Measurement Data. Sejong University, 2014

Zårate, B. A., & Caicedo, J. M. Finite element model updating: Multiple alternatives. Engineering Structures, 30(12), 3724-3730. 2008

초 록

이 논문에서는 상용중인 교량에 대하여 상시진동실험을 통하여 얻은 고유진동수와 횡분배율을 이용하여 유한요소모델 개선을 수행한다. 각 응답 사이의 가중치 최적화를 통하여 보다 정확한 유한요소모델 개선방법을 제안한다. 이 연구에서는, 유한요소모델 개선 시 횡분배율의 오차를 Modal Assurance Criterion(MAC)의 식을 이용하여 새로이 정의한다. 횡분배율과 고유진동수의 오차 사이의 가중치를 유전 알고리즘을 통하여 최적화 한다. 특히, 정적 응답은 load rating factor와 같은 구조물 평가와 관련되어 있기 때문에 정적 응답의 가중치 최적화는 중요하다. 글로벌 최적 해를 잘 구하는 것으로 알려진 유전 알고리즘을 이용하여 유한요소모델 개선 시 횡분배율과 고유진동수 사이의 가중치를 최적화 할 수 있다. 제안된 방법은 정해를 알고 있는 가상의 교량을 이용하여 검증하였다. 또한, 실제 교량에 제안한 방법을 적용했을 때의 내하율을 계산하였다. 그 결과, 정적 또는 동적 응답만 사용한 유한요소 모델 개선보다 두 응답을 모두 사용한 유한요소 모델 개선이 보다 정확한 해를 얻는다. 또한, 제안된 방법에 의해 가중치 최적화를 수행하여 유한요소 모델 개선을 수행하면 보다 정확하게 유한요소 모델 개선을 할 수 있다.

주요어 : 횡분배율, 유한요소 모델 개선, 가중치 최적화, 정적 및 동적 응답

학번 : 2014-20542