creative commons

COMMONS DEED

저작자표시-비영리-변경금지 2.0 대한민국

이용자는 아래의 조건을 따르는 경우에 한하여 자유롭게

- 이 저작물을 복제, 배포, 전송, 전시, 공연 및 방송할 수 있습니다.

다음과 같은 조건을 따라야 합니다:

저작자표시. 귀하는 원저작자를 표시하여야 합니다.

비영리. 귀하는 이 저작물을 영리 목적으로 이용할 수 없습니다.

변경금지. 귀하는 이 저작물을 개작, 변형 또는 가공할 수 없습니다.

- 귀하는, 이 저작물의 재이용이나 배포의 경우, 이 저작물에 적용된 이용허락조건을 명확하게 나타내어야 합니다.
- 저작권자로부터 별도의 허가를 받으면 이러한 조건들은 적용되지 않습니다.

저작권법에 따른 이용자의 권리는 위의 내용에 의하여 영향을 받지 않습니다.

이것은 이용허락규약(Legal Code)을 이해하기 쉽게 요약한 것입니다.

Disclaimer

dCollection

약학석사학위논문

Identification of Compound 48/80-activated
Chloride channel in RBL-2H3

Compound 48/80 에 의해 활성화되는 RBL-2H3 의 염소 채널을 규명하는 연구

2015 년 02 월

서울대학교 대학원
약학과
병태 생리학 전공
김현석

Compound 48/80 에 의해 활성화되는 RBL-2H3 의 염소 채널을 규명하는 연구

Identification of Compound 48/80-activated Chloride channel in RBL-2H3

지도교수 오 우 택

이 논문을 약학석사 학위논문으로 제출함

2015 년 02 월

서울대학교 대학원

약학과

병태 생리학 전공

김 현 석

김현석의 약학석사 학위논문을 인준함

2015 년 02 월

위 원 장 _____(인)

부위원장_____(인)

위　　원 _____(인)

ABSTRACT

Mast cells are present in tissues in the body and participate in many physiological processes including allergy, tissue remodeling, fibrosis, angiogenesis, and autoimmunity. They can be activated by many stimuli, including calcium (Ca^{2+}) ionophores, Compound 48/80, neuropeptides and immune stimulation. When activated, mast cells release several mediators, such as histamine, cytokines and bradykinin.

According to many reports, increment of intracellular Ca^{2+} is the key factor for mast cell degranulation. Compound 48/80 mediated Ca^{2+} mobilization was regulated by 4,4'-diisothiocyanato-stilbene-2,2'-disulfonic acid (DIDS), general chloride (Cl^-) channel blocker. In this thesis, we identify the Compound 48/80 induced Cl^- channel which is involved in increase of intracellular Ca^{2+} and histamine degranulation in Rat Basophilic Leukemia cell (RBL-2H3) cell.

Ion channel activated by Compound 48/80 was examined in RBL-2H3 cells using whole-cell patch clamp. Compound 48/80 evoked robust Cl^- current in RBL cells and these currents were inhibited by Cl^- channel blockers, including DIDS and 5-nitro-2-(3-phenylpropyl-amino)benzoic acid (NPPB). Next, we found that Cystic Fibrosis Transmembrane Conductance Regulator (CFTR) protein is expressed in RBL cells by

using RT-PCR. Our data showed that Cyclic AMP, known as CFTR agonist, mediated Cl^- current was abolished by DIDS and CFTR-(inh)-172. When CFTR is expressed in HEK293T cells, Compound 48/80 induced CFTR dependent current which was inhibited by ADP substitution and activated by Forskolin and IBMX mixture. These findings suggest that Compound 48/80 mediated Cl^- channel is CFTR.

Keywords: RBL-2H3, Compound 48/80, Patch Clamp Technique, Cystic Fibrosis Transmembrane conductance Regulator (CFTR),

Student Number: 2013-21582

CONTENTS

LIST OF FIGURES AND TABLE

INTRODUCTION

Mast cells were founded about one century ago by Paul Ehrlich who called them mastzellen meaning “well fed” cells because of their turgid shapes (1, 2). Mast cells can contain couple hundreds of granules (3-6). They are well scattered throughout the body system; virtually all types of tissues and vascularized organs. These cells are mainly originated from basophilic pluripotent progenitors in the bone marrow (7, 8). Those progenitors transfer via blood vessels to the target tissues where progenitors are differentiated into mast cell (9-11). Matured mast cells generally cluster around blood vessels, nerves epithelia, including gastrointestinal tract and pharynx (12).

Ubiquitous mast cells have a functional role in many pathological and physiological processes, such as allergy, tissue remodeling, fibrosis, angiogenesis, and autoimmunity (13). They can be triggered by several pathways, and release numerous mediators. However, in this thesis, we only cover on limited types of pathway and mediator.

Mast cells can be found at mucosal barriers and are involved in inflammation by releasing granules into surrounding tissue (18, 19). They play an important role in immune disease, such as asthma and allergies (20-23). Degranulation is generally occurred in the beginning of inflammation, whereas some newly formed mediators, such as cytokines and lipid mediators are

associated with later phase of inflammation. Mast cell granules are acidic which provide appropriate environment for storing mediators, such as histamine, β-hexosaminidase (β-hex), and proteases such as tryptase and chymase. Those granules are located near the plasma membrane of the cells and synthesized from pro-granules. (24).

In primary immune system, there is no doubt about the fact that mast cells play eminent role; they recruit immune cells, such as neutrophil, when bacteria or/and virus trespass into the system (25, 18). While they are abiding on the tissue, they can produce growth factors, angiogenic and neurogenic factors, such as granulocyte macrophage-colony stimulating factor, vascular endothelial growth factor and nerve growth factor respectively (1, 26, 27). Mast cells also promote tissue regeneration and remodeling in order to maintain homeostasis (28, 29). They also play the first line of defense against invading pathogens by densely dwelling at possible peril zone (18, 26).

Mast cells get involved in many diseases, including chronic bronchitis, atopic dermatitis, systemic mastocytosis, inflammatory bowel disease, cancer, atherosclerosis, allergies and asthma (30-35). Mast cells are well known to be the major factor in the initiation and propagation of allergic response by degranulation of mediators (13, 36). For instance, in the airway of patients experiencing asthma, increment in number of mast cells is observed. Then, mediators released from those cells directly contact into epithelia tissue of airway, which cause hypersensitivity (31).

Cells in general function and communicate through ion channels. Function of cation (Na^+, K^+ or Ca^{2+}) channels are well known whereas anion channels are not. Among anion channels, chloride channels are the most significant and abundant especially in mammal tissues. (37) Cl^- channels are participated in modulating intracellular pH, cell cycle, cell volume, apoptosis, synaptic transmission and cell excitability (37). In mast cell mediator degranulation is directly regulated by intracellular Ca^{2+}; Ca^{2+} flow is directly affected by other ion currents, including Cl^- (38). In previous research in our lab, Ca^{2+} signal was completely abolished by 4,4'-Diisothiocyano-2,2'-stilbenedisulfonic acid (DIDS) which blocks Cl^- channels in general in mast cells.

There are several compounds which stimulate the mast cells by inducing Ca^{2+} influx to the cell. Most often thought of in the context of mast cell is IgE-dependent pathway; when antigen is present two IgE molecules bind to FCεR1 which triggers signaling mechanism (10, 14). Yeast antibiotic calcium ionophore A23187 forms stable complexes which form channels or transporters in the transmembrane so that cation, especially Ca^{2+}, can cross the membrane (15). Substance P binds to neurokinin-1 receptor, well known G-Protein Coupled Receptor (GPCR), which induces secretion (12, 16).

Compound 48/80 is a polymer artificially synthesized by the condensing N-methyl-p-methoxy-phenethylamine with formaldehyde. When Compound

48/80 is applied to the skin tissue, it induces scratching behavior due to itchiness (51). It encourages histamine release of the mast cell, but the specific mechanism needs to be elucidated (17, 45). Moreover, Compound 48/80 mediates intracellular Ca^{2+} increase in mast cells along with membrane currents (52).

Cystic Fibrosis Transmembrane conductance Regulator (CFTR) is a Cl^- channel / transporter protein which is activated by intracellular ATP binding (37, 39 and 40). This protein is composed of two membrane-spanning domains (MSD), each containing six transmembrane domains, linked by a PKA binding intracellular regulatory domain (37). CFTR has two cytoplasmic nucleotide binding domains (NBD) after 6th domain where ATP binds (41). CFTR is triggered by PKA phosphorylation at the regulatory domain, which leads to confirmation change that allows ATP binding to NBD1. Binding of ATP on NBD1 executes another conformational change in NBD2 for ATP binding. Then, those two NBDs interact together to open up the channel which allows Cl^- influx (37, 42). When ATP at the NBD2 become hydrolyzed, final conformational change occurs which inactivates the channel and close the gate (7, 40, Figure 11). Therefore, frequency of CFTR activity depends on the rate of binding of ATP at NBD1, whereas the duration of channel activity depends on the rate of ATP hydrolysis at NBD2 (7).

MATERIALS AND METHODS

1. Cell culture

HEK293T cells and RBL-2H3 cells were nourished in Dulbecco's Modified Eagle Medium (DMEM) which contains 10% fetal bovine serum (FBS), 1% sodium pyruvate and 0.5 % penicillin-streptomycin. Each type of cells was incubated at 37 °C and 5.0 % CO_2. To perform electrophysiology technique, cells were counted and placed on the round glass coverslips one day or two prior to the experiment.

2. Plasmids and Transfection

All plasmids were cloned based on NCBI GeneBank database. Human CFTR gene in pcDNA 3.1 vector, not expressing GFP, was prepared. HEK293T cell cultures that were ~75% confluent were transfected with 0.5 μg of CFTR gene and 0.5 μg of empty pEGFP-N1 vector, expressing GFP, using FuGENE (Promega) as per the manufacture's instruction and allow to incubate in 5% CO_2 at 37 °C at least 24 hours prior to use.

3. Electrophysiology recording

Recordings were performed by mean of Whole-cell patch clamp configuration. Various types of shape of RBL-2H3 cells and Fluorescent HEK293T cells were chosen for recording. Data were acquired by *Axopatch 200B* amplifier controlled by *Clampex 10.2* via a *Digidate 1440A* data acquisition system (Molecular Devices). In most experiments, we set the holding potential at -60 mV. Data were low-pass filtered at 5kHz and analyzed using *ClampFit 10.2* software (Molecular Device).

4. Solution

Solutions were prepared and used to create artificial intra- and extracellular environment. To measure I-V curve, the pipette solution contained: 70 mM NaCl, 2 mM $MgCl_2$, 1 mM EGTA, 10 mM HEPES, 100 mM ATP and 100 mM GTP. The bath solution contained: 150 mM NMDG-Cl, 2 mM $MgCl_2$ and 10 mM HEPES. In order to constitute $[Ca^{2+}]_i$ free and cation impermeable environment, the pipette solution contained: 140 mM NMDG-Cl, 2 mM $MgCl_2$, 1 mM EGTA, 10 mM HEPES, 100mM ATP and 100 mM GTP. The bath solution contained: 140 mM NMDG-Cl, 2 mM $MgCl_2$ and 10 mM HEPES.

5. Drug

Agonists and inhibitors used in this research were purchased from Sigma-Aldrich. There is no further modification on them. Each Drug was dissolved in appropriate solvent and stocked in -20 °C. Cyclic AMP (50 μM), ADP (100 mM), ATP (100 mM) and GTP (100 mM) were dissolved in triple distilled water (TDW), and Compound 48/80 (5 μg/ml), DIDS (100 μM), NPPB (100 μM), DPC (1 mM), CFTR(inh)-172 (5 μM), Forskolin (3 μM) and IBMX (10 μM) were soluble to Dimethyl Sulfoxide (DMSO).

6. Total RNA purification and first cDNA synthesis

Total RNAs from RBL-2H3 cells were purified and collected by mean of *easy-spin™ Total RNA Extraction Kit* (iNtRON Biotech, Korea). Then, first strand cDNAs were reversely transcribed with *GoScript™ Reverse Transcription System* (Promega).

7. Reverse Transcription Polymer Chain Reaction

We performed Reverse Transcription Polymerase Chain Reaction (RT-PCR) analysis using *Dream Taq DNA Polymerase* (Thermo Scientific). Synthesized cDNA of

RBL-2H3 underwent PCR with given primers. The best results were achieved under the condition of 30 cycles at 58°C annealing temperature. The sequences of forward and reverse primers are listed in Table 1 below.

Table 1. RT-PCR primers

Target protein		Primer Sequence
GAPDH	Forward	5'- ATG ACT CTA CCC ACG GCA- 3'
	Reverse	5'- ACT GTG GTC ATG AGC CCT- 3'
LRRC8A	Forward	5'- TGG CTC CAT GGA CAA GAA GT- 3'
	Reverse	5'- AGG ATC TTG AAG AGG GTG GC- 3'
CFTR	Forward	5'- CTA AGC CAT GGT CAC AAG CA- 3'
	Reverse	5'- TTG CAC TTC TTC CTC CGT CT- 3'
ANO 1	Forward	5'- CGT GGT CAT CAT TCT GCT GG- 3'
	Reverse	5'- TTA TGT ACT CCT CGC GGT CC- 3'
ANO 10	Forward	5'- GCT GTA CGT GCC CAG TAT TG- 3'
	Reverse	5'- AGT GCC CAT TTC CTT CTC CA- 3'
TRPC 1	Forward	5'- GGT TCG GAC AGA TGT CAG GT- 3'
	Reverse	5'- GGG CAA AAG TTG CCA AGT AA- 3'
TRPC 2	Forward	5'- CTA ACA CCC GTC CCC CTT- 3'
	Reverse	5' - GAT TAA GGG CTT CCC TCC- 3'
TRPC 3	Forward	5' - CTT GTG TTC AAC GCC TCA GA- 3'
	Reverse	5' - AGG GTC AGA AGG AAG CCA TT- 3'

8. Statistical analysis

All results are calculated as the mean ± S.E. of at least three independent experiments were averaged, 'n' is indicating the number of trials. Statistical significance test (one-way ANOVA with post hoc Tukey) analyses were performed using a statistical package (Sigma Plot). Statistical significance was accepted at p values of: * $p < 0.05$, ** $p < 0.01$

RESULTS

1. Compound 48/80 stimulates Cl^- currents in RBL-2H3

To determine whether Compound 48/80 generates the currents in RBL-2H3 cells, we examined the voltage-current (I-V) relationship of Compound 48/80 induced currents; we constituted different NaCl concentration of intra- and extracellular solution: respectively 70 mM and 150 mM. Then, in order to predict the reversal potential (V_{rev}) of I-V relationship, Nernst Equation was used. Then, equilibrium potential (V_{eq}) for Cl^- ion was calculated; other ions are unconsidered in this experiment due to canceling out. According to the Nernst equation, the value of given Cl^- equilibrium potential (V_{Cl}) was -19.2 mV.

After Compound 48/80 treatment, in I-V curve, the outward rectifying I_{Cl^-} currents in response to a depolarizing ramp step protocol were appeared at -20 mV which is approximate to calculated V_{Cl} (Figure 1). Taken together these data indicate that the Compound 48/80 does stimulate I_{Cl^-} current in RBL-2H3 cell.

2. Cl- current induced by Compound 48/80 is ablated by general Cl- channel inhibitors in RBL-2H3

Endogenously existing channel proteins are not ubiquitous; some cells contain and some do not. Thus, population study was performed to confirm the presence of Compound 48/80 induced chloride channel in RBL-2H3. To constitute the environment, allowing Cl^- permeation specifically but not cations, NMDG-Cl solution was applied in both intra- and extracellular. Notably, 27 cells out of 40 (68%) exhibited robust and irreversible Cl^- current response (about 1 nA) to Compound 48/80 (figure 2).

In addition, to advocate the idea of Cl^- channel function in response to Compound 48/80, pharmacological inhibitory effect on Cl^- channel was examined. Remarkably pretreatment of both DIDS and NPPB, general Cl^- channel blockers, eliminated I_{Cl} current induced by Compound 48/80 (figure 3). Taken together, this data show that Compound 48/80 activated unknown Cl^- channel in RBL-2H3.

3. Compound 48/80 activates CFTR in RBL-2H3

3.1. CFTR is endogenously expressed in RBL-2H3

To examine what kind of Cl^- channels are endogenously expressed in RBL-2H3

in the molecular level, we performed RT-PCR.. RT-PCR analysis revealed that there were CFTR, LRRC8A (VRAC) and Anoctamin 10 (CaCC) are expressed (figure 4). Among those channels, CFTR is the Cl^- channel which is widely expressed in immune cells and plays a sentinel role, such as protection against bacterial infection (40, 50). Therefore, we first targeted CFTR among many other Cl^- channel candidates in RBL-2H3. In addition, to examine the function of CFTR, we monitored the current when cyclic AMP, known as CFTR activator, is applied into the cytosol of RBL-2H3 through the electrode. Slowly activating currents (0.4 nA) were occurred and, then, DIDS and CFTR (inh)-172 were treated individually. Remarkably, the trace became recovered back to base (figure 5).

3.2. I_{Cl^-} current induced by Compound 48/80 is responsible to CFTR

Next, we sought to determine whether Compound 48/80 activates CFTR which generates I_{Cl^-} current in RBL-2H3. The currents stimulated in response of the ligand were treated with CFTR specific pharmacological inhibitors, DPC and CFTR (inh)-172. Notably, we observed that Compound 48/80 induced I_{Cl^-} currents were suppressed by CFTR specific blockers (figure 6). Moreover, when ADP is substituted in the pipette instead of ATP, CFTR activator, current in response to Compound 48/80 became null (figure 7). Collectively, these data represent that I_{Cl}- induced by Compound 48/80 is germane to CFTR in RBL-2H3.

4. Compound 48/80 activates I_{Cl^-} currents in CFTR overexpressed HEK293T cell

To examine CFTR in response to Compound 48/80, we first assessed overexpressed CFTR on HEK293T cell. There is no endogenous CFTR protein expressed in HEK293T. Thus, no current was observed in response of both Compound 48/80 and mixture of Forskolin and IBMX (figure 8 and 9). Forskolin is the ligand which generates cAMP and IBMX is a phosphodiesterase inhibitor which prevents cAMP degradation; overall cAMP concentration remained steady in cytosol due to the fact that HEK293T cell contains Forskolin receptor. In contrast, after we transfected hCFTR into the HEK293T cells, robust current activities were readily apparent in response of both agonists (figure 8 and 9). In addition, to confirm CFTR activity in HEK293T, we applied ADP, intracellular CFTR inhibitor, along with Compound 48/80 treatment. After all, replacement of ATP to ADP suppressed currents, which was the same response in RBL cells (figure 10). Taken together these data indicates that CFTR channel is responsible to I_{Cl^-} current induced by Compound 48/80.

.

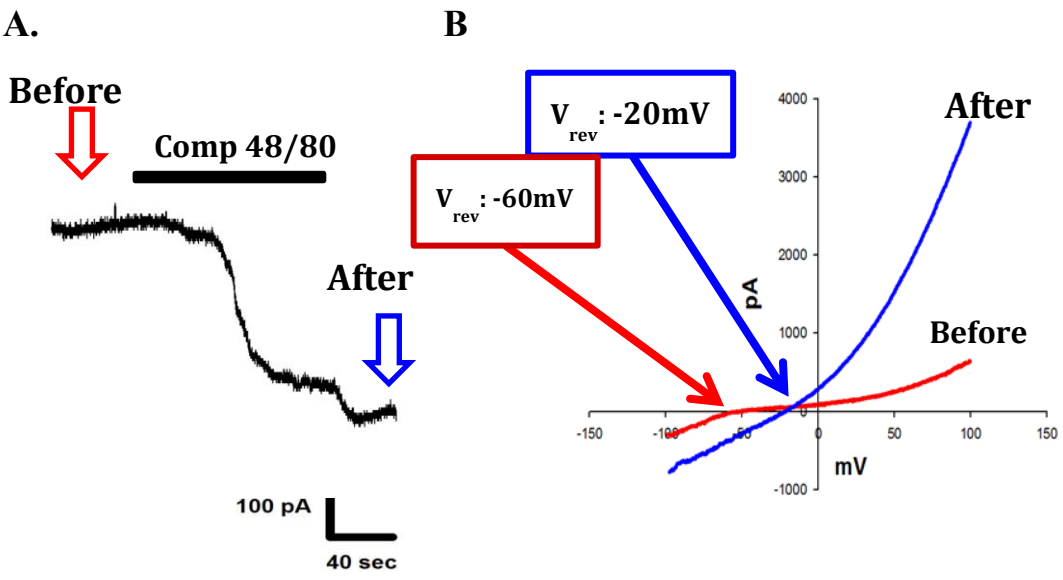

Figure 1. Compound 48/80 mediates I_{Cl}^- current in RBL-2H3

(A) Current response from whole-cell patch clamp recordings in response to Compound 48/80 (5 μg/ml) under condition of different NaCl concentration in extra- and intracellular; 150 mM and 70 mM respectively.

(B) I-V relations measured at the steady stage before and after Compound 48/80 treatment. Voltage ramp were given from a holding voltage of -60 mV to voltage between -100 mV to +100 mV. (n=5)

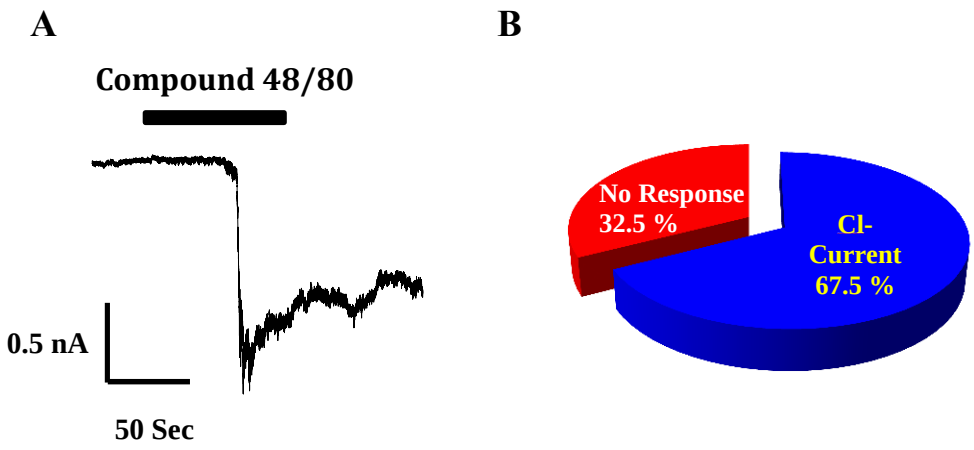

Figure 2. Endogenous Cl^- channel induced by Compound 48/80 is present in RBL-2H3

(A) Current response to Compound 48/80 (5 μg/ml) in RBL-2H3 cell to the both bath and pipette of NMDG-Cl^- solution.

(B) Population study (n = 40). 27 out of 40 RBL-2H3 cells (67.5 %) exhibits endogenous Cl^- current in RBL-2H3.

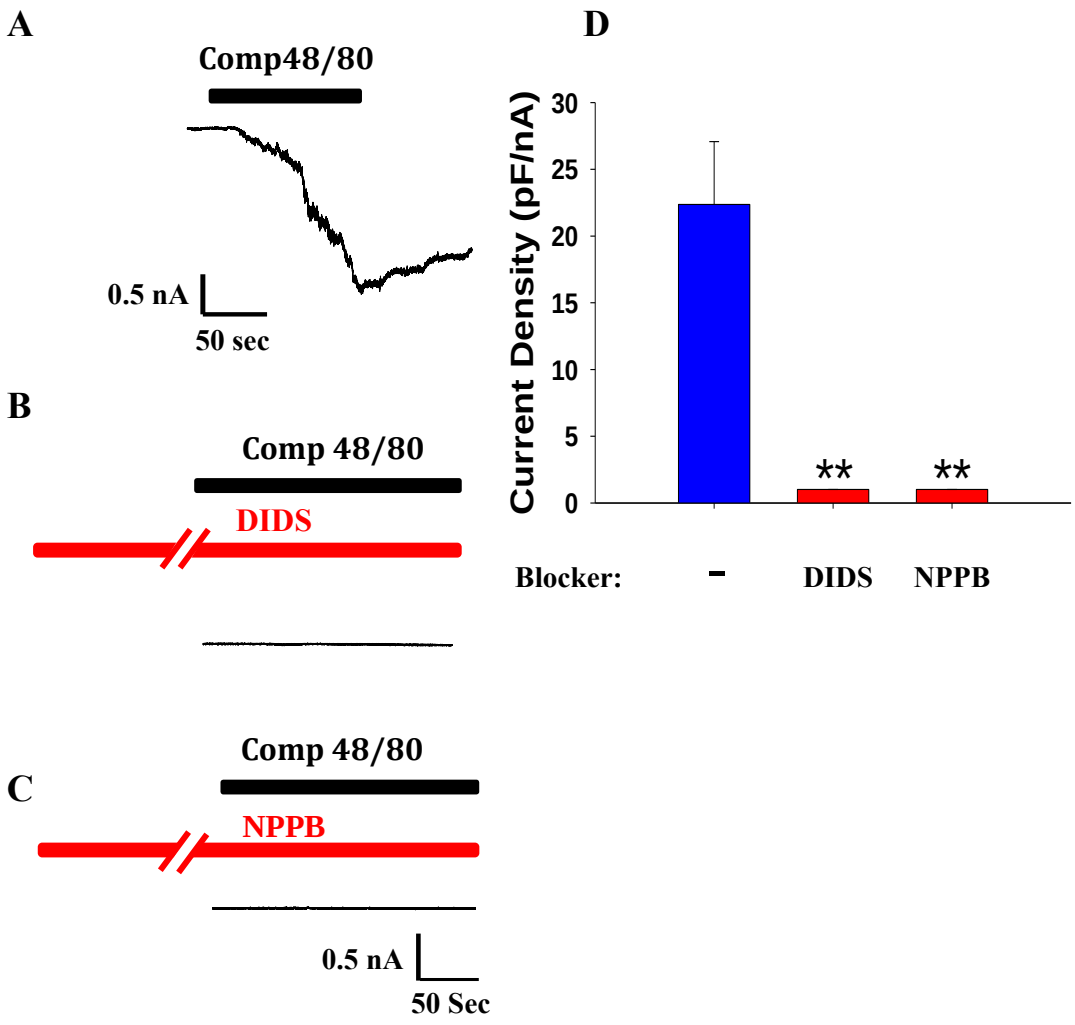

Figure 3. I_{Cl^-} current in response to Compound 48/80 is inhibited by Cl^- pharmacological inhibitor.

(A) Current response to Compound 48/80 and it's abolished by 5 minutes long pretreatment of (B) NPPB (10 μM) and (C) DIDS (100 μM). (D) Comparison of current density after NPPB (n = 5) and DIDS (n = 6) application. $^{**}P > 0.01$ compared to control. Error bars, mean ± s.e.m.

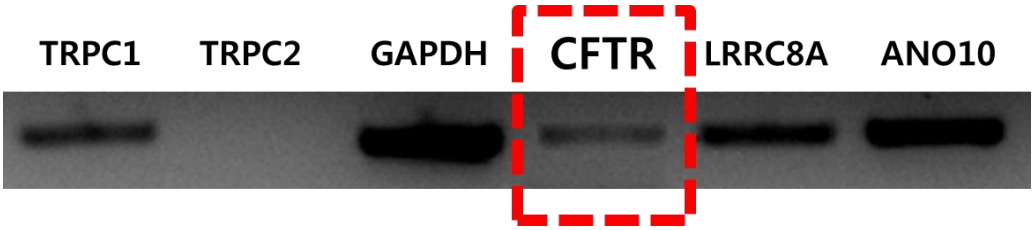

Figure 4. CFTR gene is endogenously expressed in RBL-2H3

RT-PCR analysis of CFTR genes. CFTR gene is endogenously expressed in RBL-2H3 cells, along with TRPC channels, VRAC (LRRC8A) and CaCC (ANO 10).

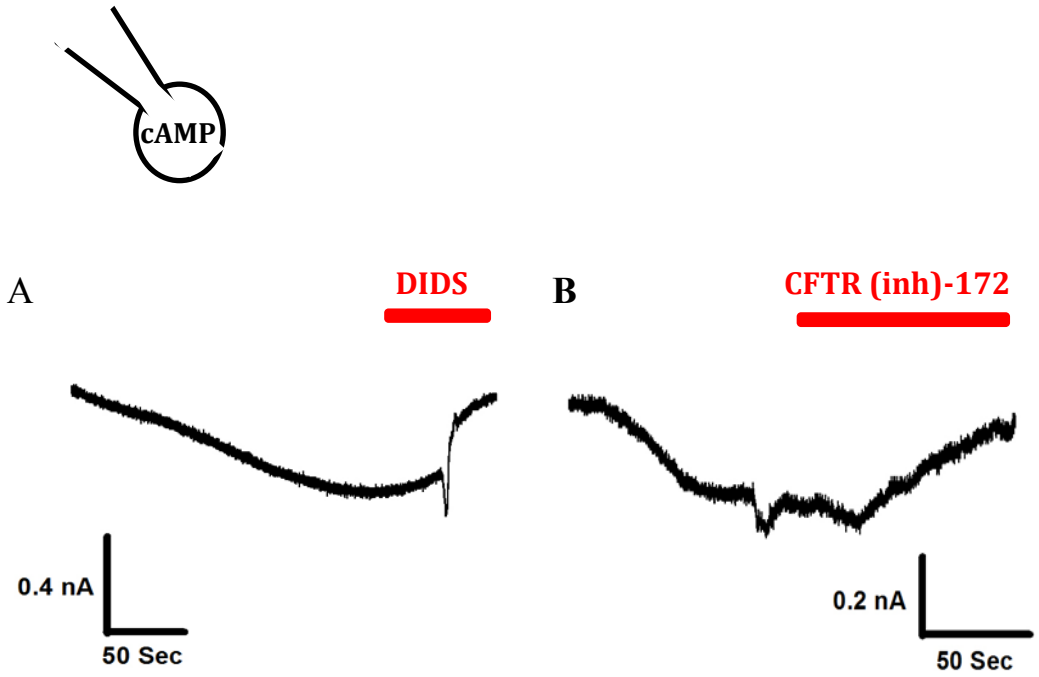

Figure 5. Functional CFTR channel is present in RBL-2H3

(A) Current response to cAMP (1 mM) in electrode is blocked by DIDS (100 µM) and (B) CFTR-(inh)-172 (5 µM).

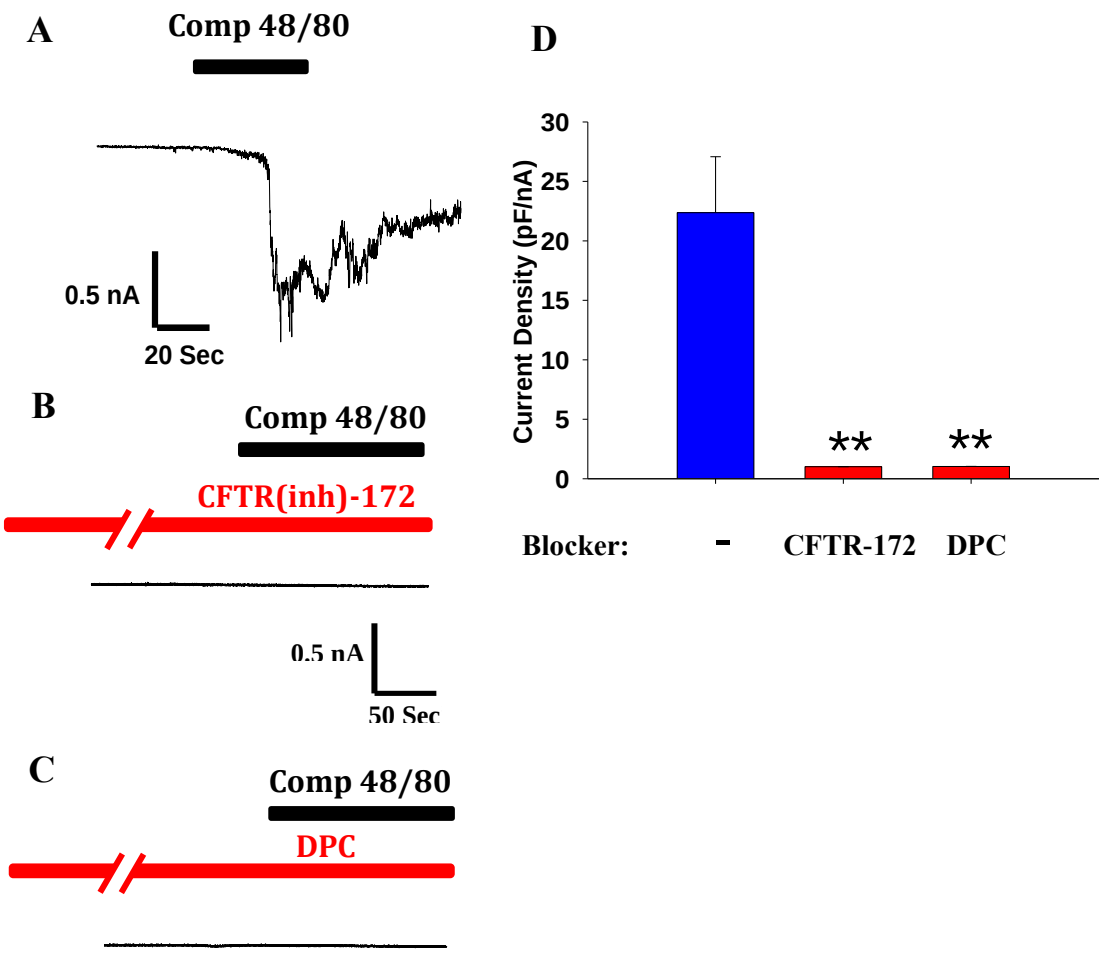

Figure 6. I_{Cl^-} current mediated by Compound 48/80 is abolished by CFTR specific inhibitor in RBL-2H3

(A) Current response to Compound 48/80 and it's abolished by (B) CFTR(inh)-172 (10 μM) and (C) DPC (1 mM). (D) Comparison of current density after CFTR(inh)-172 (n = 6) and DPC (n = 7) application. $^{**}P > 0.01$ compared to control. Error bars, mean ± s.e.m.

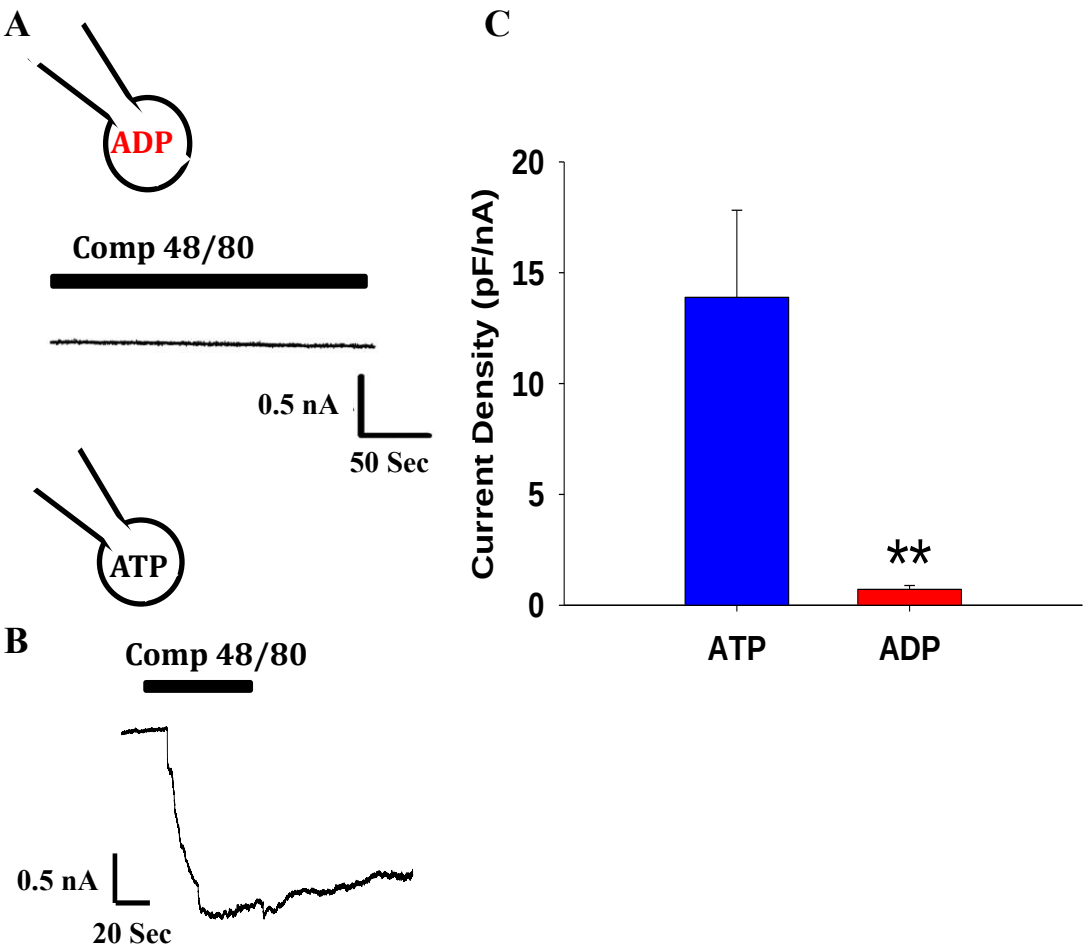

Figure 7. ADP substitution inhibits I_{Cl^-} mediated by Compound 48/80 in RBL-2H3

(A) Current response to Compound 48/80 when ADP (100 mM) is substituted in the pipette in RBL-2H3. (B) ATP substitution in the pipette. (C) Comparison of current density between ATP (n=16) and ADP (n=11) substitution. **P > 0.01 compared to control. Error bars, mean ± s.e.m.

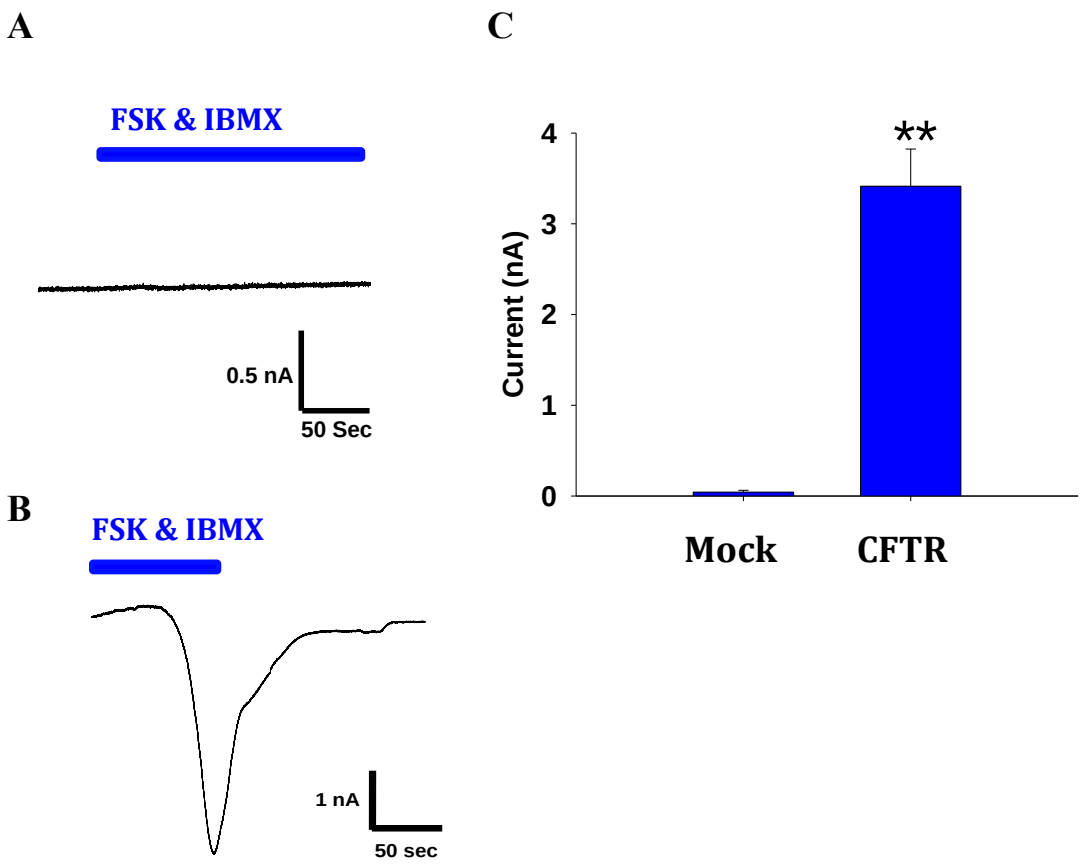

Figure 8. Forskolin & IBMX mixture activates CFTR overexpressed HEK293T

(A & B) Current response to Forskolin (3 μM) and IBMX (10 μM) mixture in CFTR overexpressed HEK293T and Mock. (C) Comparison of current amplitude between mock (n=5) and CFTR overexpression (n=7). $^{**}P > 0.01$ compared to control. Error bars, mean ± s.e.m.

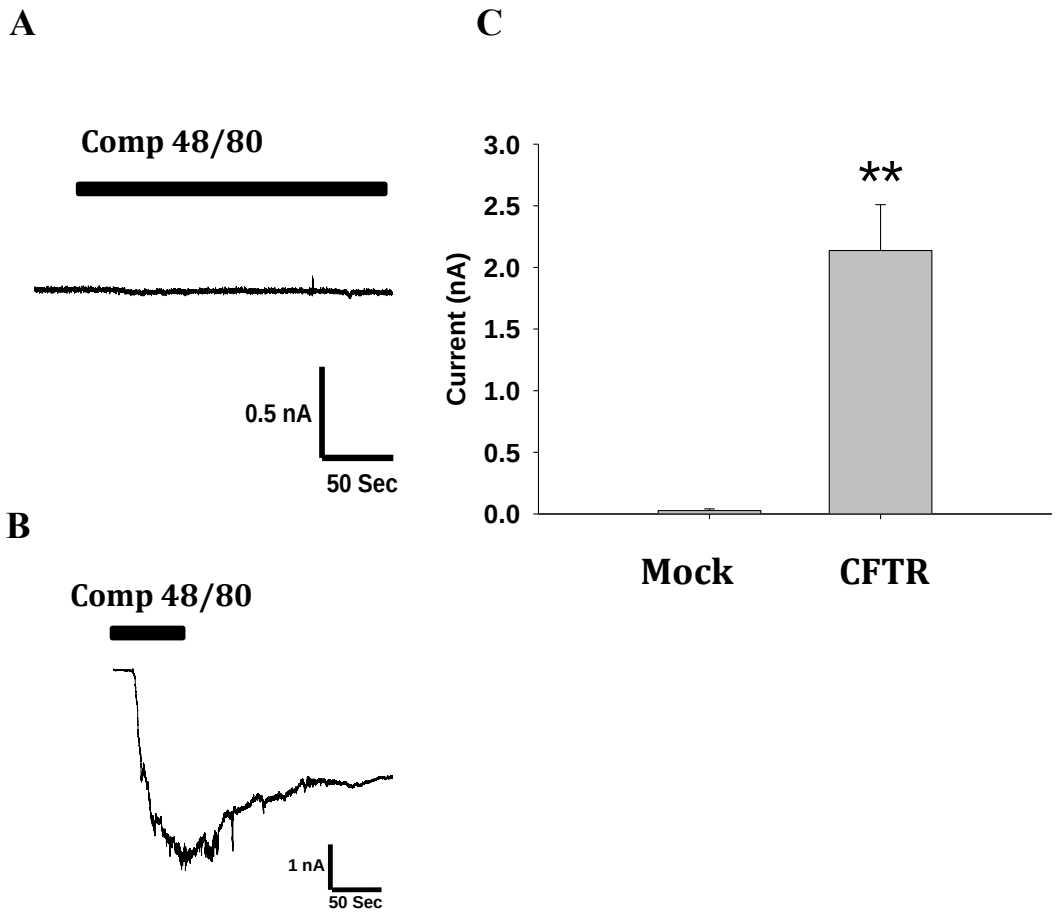

Figure 9. Compound 48/80 activates CFTR overexpressed HEK293T

(A & B) Current response to Compound 48/80 in CFTR overexpressed HEK293T and Mock. (C) Comparison of current amplitude between mock (n=4) and CFTR overexpression (n=8). $^{**}P > 0.01$ compared to control. Error bars, mean ± s.e.m.

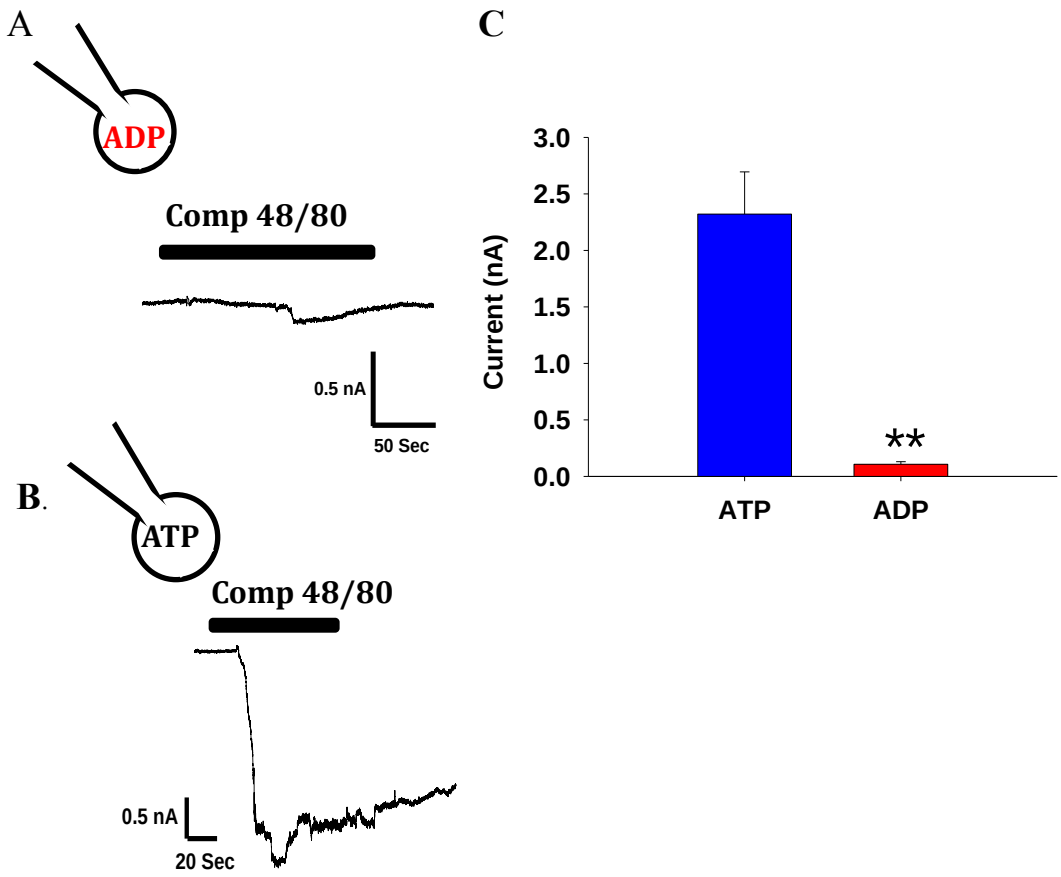

Figure 10. ADP substitution inhibits I_{Cl}^- mediated by Compound 48/80 in CFTR overexpressed HEK293T

(A) Current response to Compound 48/80 when ADP (100 mM) is substituted in the pipette in HEK293T cells. (B) ATP substitution in the pipette. (C) Comparison of current amplitude between ATP (n=7) and ADP (n=4) substitution. **P > 0.01 compared to control. Error bars, mean ± s.e.m.

A.

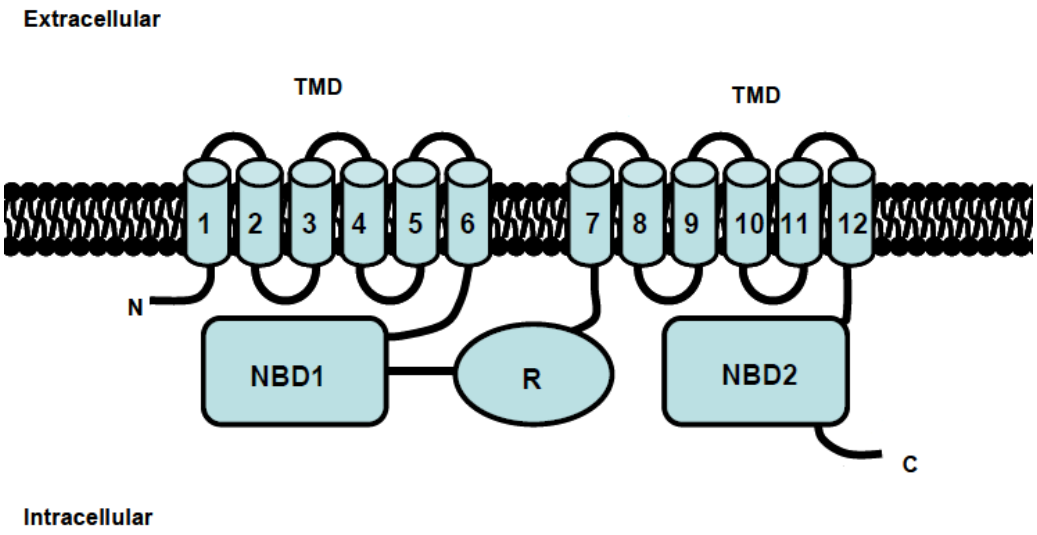
Extracellular
TMD
TMD
1
2
3
4
5
6
7
8
9
10
11
12
N
NBD1
R
NBD2
C
Intracellular

B.

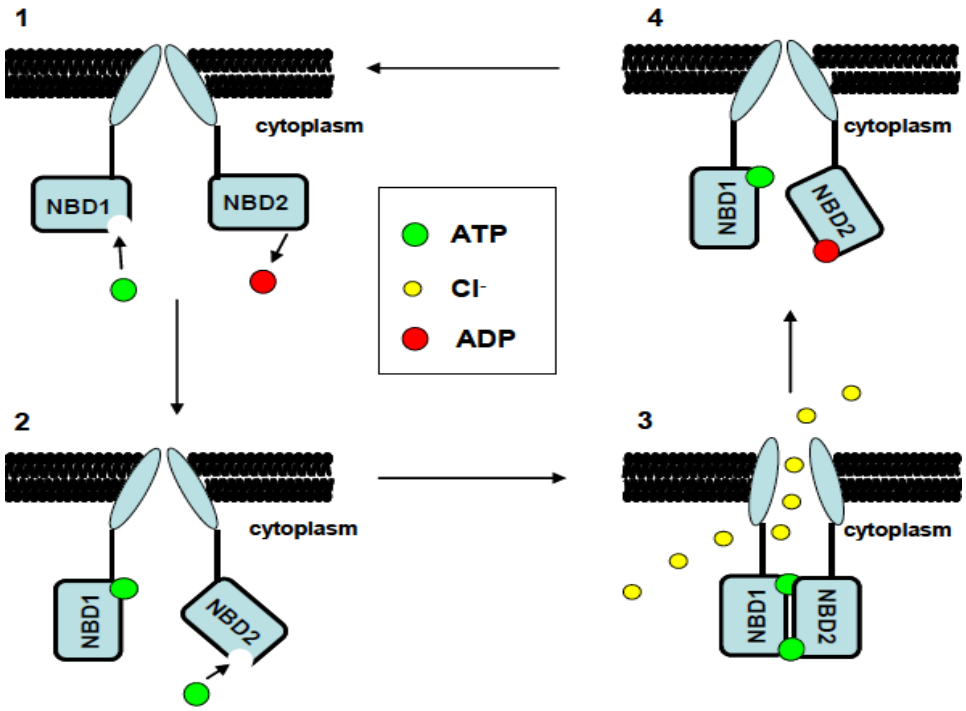
1
cytoplasm
NBD1
NBD2
ATP
Cl-
ADP
2
cytoplasm
NBD1
NBD2
3
cytoplasm
NBD1
NBD2
4
cytoplasm
NBD1
NBD2

Figure 11. Topology of CFTR and its mechanism

(A) Structural topology of CFTR including N- and C- terminus, two six-transmembrane domains (TMD), two neucleotide (ATP) binding domain (NBD) and one regulatory domain (R) where PKA binds.

(B) Mechanism of CFTR gating driven by ATP hydrolysis: (1). When PKA is phosphorylated at R domain, conformation of one NBD is changed so ATP can binds. (2). This change leads to conformation change of another NBD, which allows ATP binding. (3). Two NBD coupled together, which contorts the TMDs for pore opening. (4). Pore is closed by conformation change, driven by ATP hydrolysis at NBD. More than 10^6 Cl^- ions pass through the channel per two ATP molecules

DISCUSSION

For several years, many effects have been made the identify the mechanism of Compound 48/80 mediated histamine degranulation of mast cell to attempt to dissect allergic hyper-responsive itchiness, known as Atopy or Atopic syndrome. In fact this syndrome embraces all kinds of symptoms, including itchiness, coughing, redness and etc., which are mediated by excessive IgE activation (43). Activated IgE molecules bind to FCεR1 of mast cells and trigger signaling mechanism leading to degranulation (9, 14). Similar to IgE mediated allergic response, Compound 48/80 also promotes the itchiness via mast cell activation; mechanism of compound 48/80 is still remained unknown.

In this thesis, therefore, we attempted to identify the Cl^- channel activated by Compound 48/80; which causes membrane depolarization, followed by intracellular [Ca^{2+}] influx in RBL-2H3 cells, rat basophilic leukemia (mast) cells. First of all, by mean of pharmacological Cl^- channel inhibitors and different constitution of intra- and extracellular solutions, presence of Cl^- channel in response to Compound 48/80.

Then, we narrowed down the Cl^- channel candidates; we applied 1 mM of EGTA into the pipette to chelate intracellular [Ca^{2+}] which is an agonist of the Calcium-activated Chloride Channel (CaCC). Our second candidate was CFTR due to the fact that it is widely studied, with over 5,000 published articles, in immune system research along with cystic fibrosis (44). Moreover, there is evidence that CFTR gene is

expressed in cultured mast cells (45). We, thereafter, identified that CFTR is the Cl^- channel in response to Compound 48/80 in RBL-2H3 cell using CFTR specific inhibitor and RT-PCR. Inconsistent to the function study with electrophysiology, in RT-PCR data, CFTR gene expression is at low levels compared to other genes, such as TRPC1 and ANO 10. In fact, however, quantity of gene expression in molecular level does not always have a direct relationship with its functional importance in protein level. For instance, CFTR is expressed about 400-1000 times lower in T cells than endothelial cell enriched with CFTR, but it perfectly carries out its role in the cell (46). Further study is required to confirm whether CFTR is the only channel in response to Compound 48/80 by using a specific pharmacological inhibitor of each Cl^- channel.

To determine whether activation of CFTR in RBL-2H3 cells is generated by Compound 48/80, we overexpressed CFTR gene into HEK293T cell which doesn't contain CFTR channel endogenously. After transfection, robust Cl^- currents were appeared in response to Compound 48/80 and Forskolin & IBMX mixture individually. However, the current induced by Compound 48/80 exhibited a unique trace pattern, robust expression without recovery even after washout, which is different from a general channel current trace, rapid surge of current followed by rapid desensitization and reversible. Due to its distinctive pattern, some articles argued that Compound 48/80 triggers the degranulation of mast cells via GPCR signaling mechanism (47, 48, 49), but yet it's still controversial.

On the other hand, we insisted that Compound 48/80 directly binds to CFTR to generate Cl^- current. As our data shown, however, presence of ATP in the cytosol is the

key condition prior to Compound 48/80 to trigger CFTR; in the absence of ATP, substituted with ADP instead, Compound 48/80 is no use in RBL cells. In general, CFTR has two ATP binding domain for activation and one regulatory PKA binding domain in the cytosol. ATP hydrolysis causes conformation change to close the channel (Figure 11). We anticipated that, along with ATP, Compound 48/80 is a co-activator of CFTR which also hampers deactivation of the channel leading to continuous Cl^- current. In order to strengthen our theory, further study is demanded to seek for the Compound 48/80 binding site on CFTR. Moreover, for *in vivo* test, behavior of CFTR knock-out mice will be observed after Compound 48/80 injection.

Taken all together, this research will lead us one step closer to dissect mechanism of degranulation of mast cells and help us to develop new therapeutic targets and the cure for allergic hypersensitiveness.

REFERENCE

1. Rao, K.N., and M.A. Brown. 2008. *Mast cells: multifaceted immune cells with diverse roles in health and disease.* Ann N Y Acad Sci 1143:83-104
2. Beaven, M.A. 2009. *Our perception of the mast cell from Paul Ehrlich to now.* Eur J Immunol 39:11-25.
3. Dvorak, A.M. 2005. *Ultrastructural studies of human basophils and mast cells.* J Histochem Cytochem 53:1043-1070.
4. Kirshenbaum, A.S., and D.D. Metcalfe. 2006. *Growth of human mast cells from bone marrow and peripheral blood-derived CD34+ pluripotent progenitor cells.* Methods Mol Biol 315:105-112.
5. Stevens, R.L., M.E. Rothenberg, F. Levi-Schaffer, and K.F. Austen. 1987. *Ontogeny of in vitro-differentiated mouse mast cells.* Fed Proc 46:1915-1919.
6. Yong, L.C., S. Watkins, and D.L. Wilhelm. 1975. *The mast cell: distribution and maturation in the peritoneal cavity of the adult rat.* Pathology 7:307-318.
7. Gurish, M.F., and J.A. Boyce. 2006. *Mast cells: ontogeny, homing, and recruitment of a unique innate effector cell.* J Allergy Clin Immunol 117:1285-1291.
8. Arinobu, Y., H. Iwasaki, and K. Akashi. 2009. *Origin of basophils and mast cells.* Allergol Int 58:21-28.
9. Galli, S.J., J. Kalesnikoff, M.A. Grimbaldeston, A.M. Piliponsky, C.M. Williams, and M. Tsai. 2005. *Mast cells as "tunable" effector andimmunoregulatory cells: recent*

advances. Annu Rev Immunol 23:749-786.

10. Galli, S.J., J. Kalesnikoff, M.A. Grimbaldeston, A.M. Piliponsky, C.M. Williams, and M. Tsai. 2005. *Mast cells as tunable"effector and immunoregulatory cells: recent advances.* Annu Rev Immunol 23:749-786.

11. Kitamura, Y., and A. Ito. 2005. *Mast cell-committed progenitors.* Proc.Natl.Acad.Sci. U.S.A 102:11129-11130.

12. Kulka, M., C.H. Sheen, B.P. Tancowny, L.C. Grammer, and R.P. Schleimer. 2008. *Neuropeptides activate human mast cell degranulation and chemokine production.* Immunology 123:398-410.

13. Puxeddu, I., A.M. Piliponsky, I. Bachelet, and F. Levi-Schaffer. 2003. *Mast cells in allergy and beyond.* Int J Biochem Cell Biol 35:1601-1607.

14. Kopec, A., B. Panaszek, and A.M. Fal. 2006. *Intracellular signaling pathways in IgE-dependent mast cell activation.* Arch Immunol Ther Exp (Warsz) 54:393-401.

15. Luckasen, J.R., J.G. White, and J.H. Kersey. 1974. *Mitogenic properties of a calcium ionophore,* A23187. Proc Natl Acad Sci U S A 71:5088-5090.

16. Maggi, C.A. 1995. *The mammalian tachykinin receptors.* Gen Pharmacol 26:911-944.

17. A. M. Rothschild. 1970. *Mechanisms of histamine release by compound 48/80*. Br J Pharmacol 38 (1): 253-262.

18. Marshall, J.S., and D.M. Jawdat. 2004. *Mast cells in innate immunity.* Journal of Allergy & Clinical Immunology 114:21-27.

19. Marshall, J.S. 2004. *Mast-cell responses to pathogens.* Nat Rev Immunol 4:787-799.

20. Vliagoftis, H., and A.D. Befus. 2005. *Mast cells at mucosal frontiers.* Curr Mol Med

5:573-589.

21. Vliagoftis, H., and A.D. Befus. 2005. *Rapidly changing perspectives about mast cells at mucosal surfaces.* Immunol Rev 206:190-203.

22. Bissonnette, E.Y., and A.D. Befus. 1998. *Mast cells in asthma.* Can Respir J 5:23-24.

23. Kulka, M., and A.D. Befus. 2003. *The dynamic and complex role of mast cells in allergic disease.* Arch.Immunol Ther.Exp (Warsz.) 51:111-120.

24. Benado, A., Y. Nasagi-Atiya, and R. Sagi-Eisenberg. 2009. *Protein trafficking in immune cells.* Immunobiology 214:403-421.

25. Dawicki, W., and J.S. Marshall. 2007. *New and emerging roles for mast cells in host defence.* Curr Opin Immunol 19:31-38.

26. Frossi, B., M. De Carli, and C. Pucillo. 2004. *The mast cell: an antenna of the microenvironment that directs the immune response.* J Leukoc Biol 75:579-585.

27. Maurer, M., T. Theoharides, R.D. Granstein, S.C. Bischoff, J. Bienenstock, B. Henz, P. Kovanen, A.M. Piliponsky, N. Kambe, H. Vliagoftis, F. Levi-Schaffer, M. Metz, Y. Miyachi, D. Befus, P. Forsythe, Y. Kitamura, and S. Galli. 2003. *What is the physiological function of mast cells?* Exp Dermatol 12:886-910.

28. Noli, C., and A. Miolo. 2001. *The mast cell in wound healing.* Vet Dermatol 12:303-313.

29. Metcalfe, D.D., D. Baram, and Y.A. Mekori. 1997. *Mast cells.* Physiol Rev 77:1033-1079.

30. Najib, U., and J. Sheikh. 2009. *The spectrum of chronic urticaria.* Allergy Asthma Proc 30:1-10.

31. Brown, J.M., T.M. Wilson, and D.D. Metcalfe. 2008. *The mast cell and allergic diseases: role in pathogenesis and implications for therapy.* Clin Exp Allergy 38:4-18.

32. Bunimovich, O., M. Grassi, and M.R. Baer. 2009. *Systemic mastocytosis: classification, pathogenesis, diagnosis, and treatment.* Cutis 83:29-36.

33. Wasiuk, A., V.C. de Vries, K. Hartmann, A. Roers, and R.J. Noelle. 2009. *Mast cells as regulators of adaptive immunity to tumours.* Clin Exp Immunol 155:140-146.

34. Fairweather, D., and S. Frisancho-Kiss. 2008. *Mast cells and inflammatory heart disease: potential drug targets.* Cardiovasc Hematol Disord Drug Targets 8:80-90.

35. He, S.H. 2004. *Key role of mast cells and their major secretory products in inflammatory bowel disease.* World J Gastroenterol 10:309-318.

36. Theoharides, T.C., D. Kempuraj, M. Tagen, P. Conti, and D. Kalogeromitros. 2007. *Differential release of mast cell mediators and the pathogenesis of inflammation.* Immunol Rev 217:65-78.

37. Nilius, B., and G. Droogmans. 2003. *Amazing chloride channels: an overview.* Acta Physiol Scand. 177:119-147.

38. Wu, Y., J. Hu, R. Zhang, C. Zhou, Y. Xu, X. Guan, and S. Li. 2008. *Enhanced intracellular calcium induced by urocortin is involved in degranulation of rat lung mast cells.* Cell Physiol Biochem 21:173-182.

39. Mendoza, J.L., and P.J. Thomas. 2007. *Building an understanding of cystic fibrosis on the foundation of ABC transporter structures.* J Bioenerg Biomembr 39:499-505.

40. Hanrahan, J.W., and M.A. Wioland. 2004. *Revisiting Cystic Fibrosis Transmembrane Conductance Regulator Structure and Function.* In Proceedings of the American

Thoracic Society. 17-21.

41. Ostedgaard, L.S., O. Baldursson, and M.J. Welsh. 2001. *Regulation of the cystic fibrosis transmembrane conductance regulator Cl- channel by its R domain.* J Biol Chem 276:7689-7692.

42. Muallem, D., and P. Vergani. 2009. Review. *ATP hydrolysis-driven gating in cystic fibrosis transmembrane conductance regulator.* Philos Trans R Soc Lond B Biol Sci 364:247-255.

43. R. Pawankar, S.T. Holgate and L.J. Rosenwasser. 2009. *Allergy Frontiers: Classification and Pathomechanisms.* Springer. pp. 33

44. V. Witko-Sarsat, I. Sermet-Gaudelus, G. Lenoir and B. Descamps-Latscha. 1999. *Inflammation and CFTR Might Neutrophils be the Key in Cystic Fibrosis*. Mediators of inflammation. Rev 8:7-11

45. M. Kulka, M. Gilchrist, M. Duszyk, and A. D. Befus. 2002. *Expression and functional characterization in CFTR in mast cells.* J of Leukocyte Biology. Vol. 71

46. Krauss, R.D., G. Berta, T.A. Rado, and J.K. Bubien. 1992. *Antisense oligonucleotides to CFTR confer a cystic fibrosis phenotype on B lymphocytes.* Am J Physiol 263:C1147-1151.

47. G. Matthews, E. Neher and R. Penner. 1989. *Chloride conductance activated by external agonists and internal messengers in rat peritoneal mast cells.* J of physiology. 418:131-144

48. M. Hoth and R. Penner. 1993. *Calcium release-activated clacium current in rat mast cells.* J of physiology. 465:359-386

49. Higashijima, T., S. Uzu, T. Nakajima, and E.M. Ross. 1988. *Mastoparan, a peptide toxin from wasp venom, mimics receptors by activating GTP binding regulatory proteins (G proteins).* J Biol Chem 263:6491-6494.

50. G.B. Pier. 1996. *Role of Mutant CFTR in Hypersusceptibility of Cystic Fibrosis Patients to Lung Infections*. Science. 271 (5245): 64-67

51. K. Kim, et. al. 2013. *Bee venom ameliorates compound 48/80-induced atopic dermatitis-related symptoms.* Int J Clin Exp Pathol. 6(12): 2896–2903

52. G. Matthews, E. Neher and R. Penner. 1989. *Second messenger-activated calcium influx in rat peritoneal mast cells.* J of physiology. 418:105-130

국 문 초 록

비만세포는 천식 및 알레르기와 같은 염증질환을 유발하는 중요한 원인 세포이며 이들의 활성화를 통해 분비되는 물질들 중에 히스타민은 급성알레르기반응을 유도하고, 종양괴사인자 알파 (tumor necrosis factor-α, TNF-α)는 만성 알레르기성 염증질환을 유도시키는 주요한 세포 활성물질로 알려져 있다. 급성 알레르기반응의 일반적인 기전으로 항원(antigen)이 인체를 자극하여 항체인 IgE(immunoglobulin E)를 생산하고 IgE가 비만세포 표면의 수용체에 결합하면서 비만세포를 활성화하여 비만세포 내의 과립에 저장된 히스타민과 같은 여러 화학매개물질들(chemical mediators)이 분비되어 결과적으로 혈관투과성 증가, 혈관팽창, 기관지 및 내장기관 평활근 수축, 국소염증 등을 야기한다.

Compound 48/80은 비만세포 내로 칼슘 유입을 증가시켜 세포 내 칼슘 농도를 증가시켜 비만세포의 탈 과립을 일으키는 비면역학적 자극제이며 히스타민 유리 촉진제로서 주로 사용되어 왔다. 하지만 지금까지 비만세포에서 Compound 48/80에 특이적으로 활성화되는 이온 채널이 무엇인지 정확하게 밝혀지지 않고 있다.

본 연구에서는 RBL-2H3 세포에서 Compound 48/80에 의해 활성화되는 이온 채널의 기능과 특성을 알아보기 위하여 그 전류를 홀 셀 패치 클램프 기법 (Whole-cell patch-clamp technique)을 통하여 측정하였다. Compound 48/80에 의한 RBL-2H3 세포주내의 클로라이드(Cl-) 전류의 발생을 확인하였다. 이렇게

발생된 전류는 Cl^- 채널 저해제인 4,4'-diisothiocyanato-stilbene-2,2'-disulfonic acid (DIDS)와 5-nitro-2-(3- phenylpropylamino)benzoic acid (NPPB) 에 의하여 억제되었다. RT-PCR을 통하여 RBL-2H3 세포 내에 CFTR이 존재함을 확인하였다. CFTR을 활성화 시키기 위하여 pipette solutoin안에 ATP대신 ADP를 치환함으로써 궁극적으로 세포 내에 cAMP를 발생을 억제하였을 때 Compound 48/80에 대한 대부분의 RBL-2H3 세포들에서 Cl^- 전류가 저해됨을 확인 할 수 있었다.

이러한 Cl^- 이온채널은 Cystic Fibrosis Transmembrane conductance Regulator (CFTR)의 특정 저해제인 CFTR(inh)-172와 diphenylamine-2-carboxylate (DPC)를 각각 처리하여 억제됨을 확인하였다. 또한, CFTR 단백질을 HEK293T에 발현시킨 후 Compound 48/80를 처리한 결과 Cl^- 전류의 발생이 발견되었다. 결론적으로 본 연구 결과는 Compound 48/80에 의한 Cl- 전류가 비만세포의 CFTR 이온 채널의 활성화를 통한 것임을 시사한다.

주요어: RBL-2H3, Compound 48/80, Patch-clamp technique, Cystic Fibrosis Transmembrane conductance Regulator

학 번: 2013-21582