공학석사학위논문

# IGCC Process Alternatives for Simultaneous Power Generation and $CO_2$ Capture

2015 년 8 월

서울대학교 대학원

화학생물공학부

Usama Ahmed

# IGCC Process Alternatives for Simultaneous Power Generation and $CO_2$ Capture

지도교수 한종훈

이 눈문을 공학석사학위 논문으로 제출함

2015 년 6 월


서울대학교 대학원

화학생물공학부

Usama Ahmed


우사마의 공학석사학위논문을 인준함

2015 년 6 월

위 원 장 _____ (인)

부 위 원 장 _____ (인)

위 원 _____ (인)

# Abstract

Pre combustion and post combustion processes are the commercially available techniques used for power generation where pre-combustion power plants are more energy efficient if carbon capture and storage (CCS) technology is implemented on a large scale. However pre-combustion power plants tends to have higher capital and operating costs as compared to other post-combustion power plants. So in this study IGCC process which is a commercial example of pre-combustion technique has been developed in order to analyze the overall plant output with $CO_2$ capture while discussing the economics of process. Three different schemes with consistent and transparent methodology have been proposed in order to ensure fair evaluation of analysis. First two cases use water gas shift (WGS) reactions scheme with sour shift catalysis process. The resulted syngas free of $CO_2$ can either be combusted by using air or $O_2$. The first case uses air as an oxidant for burning $H_2$ and the combustor temperature is controlled by air as well. In the second case, $O_2$ is used as an oxidizing agent for $H_2$ combustion and combustion temperature is controlled by recycling the captured $CO_2$. In the third case, WGS reactor and $CO_2$ capturing unit is removed. The syngas composed of CO and $H_2$ is sent directly for combustion with high purity $O_2$ making it similar to an oxy-fuel combustion process and $CO_2$ is recovered while condensing steam from the flue gas. All the results are compared in terms of power plant efficiencies and power output. Moreover an

economics analysis has been performed to evaluate OPEX and CAPEX for all case studies. Simulation results showed that case 1 and 3 are the competitive options in terms of efficiency and power generation. Whereas the lowest OPEX, CAPEX and least $CO_2$ emissions in 3rd case makes it the best option for power generation.

Keywords: Pre-combustion, IGCC, syngas, WGS, power generation, CAPEX, OPEX

Student Number: 2013-23861

# Contents

# List of Figures

# List of Tables

# Chapter 1. Introduction

## 1.1 Research motivation

The studies and reports published by International Energy Agency (IEA) and Intergovernmental Panel on Climate Change (IPCC) shows greenhouse gas (GHG) emissions have been tremendously increased during the last few decades due to continuous increase in the electricity demand and will continue to increase if the emissions are not controlled. Most of the energy supply sector relies on fossil fuels for electricity generation and accounts for 35% of total GHG emissions [1]. IPCC 2014 report on climate change concluded that more than 75% of total GHG emissions contains $CO_2$. Coal is considered as one of the largest $CO_2$ emission sources in the energy sector that accounts for 40.58% of electricity generation in 2010. According to another report, the share of coal towards world energy output will increase by 33% in 2035 as compared to 2009 because of its abundant nature, affordability and an already existing infrastructure for power generation [2] [3]. Therefore it is required to develop and improve the power generation processes from coal in order to maximize efficiency while addressing the global warming issues. Currently operating post combustion carbon capture processes from coal would nearly double the cost of electricity (COE)

while decreasing the net output by 7-10%. Whereas pre-combustion processes have higher capital investments but they are more energy efficient if CCS is implemented on large scale. IGCC power plants which is a commercial example of pre-combustion process provides an option to capture $CO_2$ with relatively low cost and less energy losses. Moreover IGCC power plants are based on gasification processes for converting coal into syngas therefore it can be cleaned and directly burned in the gas turbines or it can be used to generate various fischer-tropsch (FT) fuels.

## 1.2 Research objectives

As a new emerging coal-based technology, IGCC systems are becoming an attractive option to limit the GHG emissions especially $CO_2$ as compared to the conventional coal power plants. Number of previous studies have reported cost and performance analysis of IGCC systems with $CO_2$ capture however there are no general models available that can be modified to reduce the capital and operating cost of power plant. This thesis, therefore, is aimed to have following objectives:

- To develop each unit process used in IGCC based on the data available in literature.
- To study technological available options for $CO_2$ capture in IGCC power plants.
- Process modification and intensification for increasing efficiency and decreasing cost of power plant.
- Evaluating key parameters affecting the performance and cost of IGCC power plants.

## 1.3 Outline of thesis

The thesis is divided into five chapters. Chapter 1 describes research motivation and objectives of the thesis.

Chapter 2 describes the comparison of IGCC technology with other available power generation technologies. Moreover this chapter includes literature survey and explains each process in detail associated with IGCC process. Some of the currently IGCC demonstration projects are also listed in this chapter.

Chapter 3 discusses the possible design options in the conventional IGCC process to decrease its capital and operating cost. Design basis for all case studies and their modelling technique has been discussed in this chapter.

Chapter 4 discusses the results obtained from all case studies in terms of electricity generation ($MW_{el}$) and power plant efficiency. Sensitivity analysis have been performed by manipulating variables to check their effect on overall plant performance. Moreover this chapter includes the economic analysis of each case study.

Lastly, Chapter 5 presents the findings and conclusion of the thesis.

# Chapter 2. Technology Overview

## 2.1 Literature Review

Archeological evidence indicates that humans have been burning coal for at least 4,000 years. It was not until the 18th century that coal started to play an indispensable role in the economy. As an important fuel that propelled the industrial revolution, coal has been widely used since the 1700s to drive steam engines, in the operation of blast furnaces for metal production, in the production of cement and in the generation of town gas for lighting and cooking. Since the late 19th century, coal has been used to power utility boilers for electricity generation. Although its dominance as an energy source was replaced by crude oil in the 1950s, coal is still the single most important fuel for electricity generation today, accounting for 40% of the electricity generated worldwide.

For years, the commercial efforts on clean coal processes have been centered on coal combustion for power generation. However, new process developments with a focus on higher energy conversion efficiencies for electricity generation as well as variability in product formation have generated considerable interest. Coal gasification schemes can provide a variety of products – e.g. hydrogen, liquid fuels and chemicals – besides electricity.

Further, gasification is a preferred scheme from a pollutant and carbon management viewpoint.

Integrated gasification combined cycle (IGCC) is a technology that itself is a combination of various process units which are combined together in order to generate electricity at higher efficiencies. The first coal fired IGCC power plant was demonstrated in 1972-1977 in Germany. This was followed by two more IGCC power plants in Cool Water (1984-1989) and Plaquemine (1987-1995) in USA. These projects were demonstrated to provide the operational and technical experience. This led to the construction of various large scale demonstration IGCC power plants in all over Europe and USA for the purpose of IGCC technology commercialization [4]. All these projects achieved or are expected to achieve the lowest levels of pollutant and air emissions.

As compared to the conventional pulverized coal firing power plant, gasification process provides great opportunity towards power plant efficiency and efficient removal of pollutants [5]. Integrated gasification combined cycle (IGCC) not only offers less expensive pre-combustion carbon techniques with an efficient control on greenhouse gas emissions but also offers to produce $H_2$ gas that can be utilized in various poly-generation processes or itself can be used as an efficient fuel [6] [7].

Recently, a lot of research has been carried out in order to investigate the feasible designs for improvement in IGCC power plant efficiencies. As IGCC power plants are based on various sub sections so variation in any process can lead to increase or decrease in net power plant output and efficiency. For an instance, co-gasification techniques that employs the use of multiple fuels can be used to not only decrease ash fusion temperature but also oxygen consumption [8]. Coal gasification with other feed stocks i.e. coke, sawdust, sewage sludge etc offers low $SO_x$ and $NO_x$ emissions while increasing hydrogen gas generation [9]. Cormos et al. [7] proposed a model of IGCC based on coal and biomass co-gasification technique for simultaneous production of electricity, $H_2$, synthetic natural gas (SNG) and fisher-tropsch (FT) fuel. Moreover low grade coals can be blended with the high grade coals in order to achieve the required syngas composition and the optimum slag viscosity [10]. While investigating the efficiency of IGCC power plant various $CO_2$ capturing mechanisms and solvents have been developed and analyzed. Urech et al. [11] comparative studies showed that there is a slight variation in the efficiencies of IGCC power plant while using different solvents. Whereas Padurean et al. [12] reported that the selexol process has least specific power and heating consumption as compared to other physical solvents. Kawabata et al. [13] proposed a model for IGCC with exergy recuperation that gives an efficiency of 33.2 % with 90 % $CO_2$ capture and 43 % without capture. Water gas shift reactions are used in conventional IGCC processes for increasing the

production of the hydrogen gas however poor heat integration and catalytic poisoning may results in decreasing overall efficiency. Ferguson et al. [14] modified the water gas shift design in IGCC process and showed an improved efficiency of 37.62%.

Most of the previous studies were mainly focused on the optimization of sub sections of a conventional IGCC process. However, optimization imparts only small improvements in the overall power plant efficiency while making the process more critical. The objective of this study is to explore various design options that can improve the process efficiency of the IGCC plant and reduce cost by process intensification. If the sole purpose is electricity generation with $CO_2$ capture then the conventional design of IGCC can be modified in order to improve thermal efficiency of power plant as compared to the PC power plants. Plant performance and cost together with CCS technology are the key issues in modern power plants and efforts have been made to maximize efficiency while keeping in view the economics of process.

## 2.2 Comparison of IGCC with PC and oxy-fuel power plant

In this section, the performance and emissions of IGCC power plants are compared with pulverized coal (PC) and oxy-fuel power plants. The main purpose is to dig out the advantages and disadvantages of IGCC power plants and its comparison with the other available technologies. PC power plants are equipped with a large scale heat exchanger network that uses steam as a working fluid. In PC power plants, coal is burned with air at ambient conditions and the heat generated during combustion is used to generate steam in the boiler. However combustion with air leads to decrease in partial pressure of $CO_2$ in the flue gas. Therefore huge volumes of flue gas has to be processed to separate $CO_2$ that leads to higher operational costs. Typically 10-15% of the flue gas contains $CO_2$ while rest contains majorly $N_2$. Oxyfuel combustion processes offers higher partial pressure of $CO_2$ in the flue gas however main challenges with oxyfuel technology is high energy costs associated with oxygen production and $CO_2$ separation from $NO_x$ and $H_2O$ in flue gas. Table 1 shows the advantages and disadvantages between all the three processes.

*Table 1: Advantages & Disadvantages of Pre and Post Combustion Process [15]*

| | **Advantages** | **Disadvantages** |
|---|---|---|
| **Post combustion** | • Applicable to the majority of existing power plants.<br>• Retrofit technology option. | Flue gas is:<br>• Dilute in $CO_2$<br>• At ambient pressure<br><br>Resulting in:<br>• Low $CO_2$ partial pressure<br>• Significantly higher performance or circulation volume required for high capture levels<br>• $CO_2$ produced at low pressure compared to sequestration pressure. |
| **Pre combustion** | Synthesis gas is:<br>• Concentrated in $CO_2$<br>• High pressure<br><br>Resulting in:<br>• High $CO_2$ partial pressure<br>• Increased driving force for separation<br>• Potential for reduction in compression cost and load. | • Applicable to new plants<br><br>Commercial barriers:<br>• Availability<br>• Cost of Equipment<br>• Extensive supporting system requirement |
| **Oxy-fuel** | • High concentration of $CO_2$ in flue gas.<br>• Retrofit and repowering technology option | • Oxygen production cost and energy is still very high.<br>• Higher $SO_x$, $H_20$ and $O_2$ content should be removed. |

IGCC power plant's efficiency is generally higher than conventional subcritical PC plant if CCS is employed on large scale. Table 2 shows the differences between IGCC power plant with PC and oxy-fuel power plants in terms of performance and energy penalties associated with and without CCS technology. The efficiency of PC power plants are estimated between 33% to 40% without CCS implementation however the efficiency drop of approximately 10% can be observed with CCS scheme. In case of IGCC process net plant efficiency is about 40% without CCS scheme however it decreases to 34% if CCS is implemented. It can be seen that energy penalties associated with IGCC process is only 19% whereas energy penalties associated with subcritical PC plants are as high as 40% [16]. Moreover IGCC power plants consumes roughly 30% less water as compared to PC power plants [17].

*Table 2: Comparison different power plants with and without CCS [16]*

| **Power plant type and capture system** | **Net plant efficiency (%) without CCS** | **Net plant efficiency (%) with CCS** | **Energy Penalty: Added fuel input(%) per net kWh output** |
|---|---|---|---|
| Existing subcritical PC, post combustion capture | 33 | 23 | 40% |
| New supercritical PC, post-combustion capture | 40 | 31 | 30% |
| New supercritical PC, oxy-combustion capture | 40 | 32 | 25% |
| New IGCC( bituminous coal), pre-combustion capture | 40 | 34 | 19% |
| New natural gas combined cycle, post combustion capture | 50 | 43 | 16% |

## 2.3 IGCC Demonstration Projects

*Table 3: Some of recent IGCC demonstration projects in the World*

| PROJECT | DETAILS |
|---|---|
| Api Energia (Italy) | • IGCC Plant<br>• Visbreaker Residue gasification to produce power<br>• Production-250MW of Power<br>• Started up in 1999 |
| Saras (formerly Sarlux) Italy | • IGCC Plant<br>• Visbreaker Residue gasification to produce power<br>• Production: Power – 550 MW of Power<br>• Production: Hydrogen – 60,000 Nm3/hr<br>• Started-up in 2000 |
| Nexen (formerly: OptiCanada) Alberta, Canada | • Hydrogen and Fuel Gas Plant<br>• Production – 337,000 $Nm^3$/hr of Syngas<br>• Started-up in 2008 |
| Duke Energy Indiana, USA | • Edwardsport IGCC Plant<br>• Coal gasification to produce power<br>• $CO_2$ Capture will be added in the future<br>• Production – 632 MW of Power<br>• Started up in 2012 |
| Southern Company Mississippi, USA | • Kemper County IGCC Plant<br>• Production: 582 MW of Power<br>• Production: 3,000,000 ton/year of $CO_2$ for EOR<br>• Commercial operating date: 1st half of 2015 |
| J-Power Japan | • Demo Power Plant<br>• Coal gasification to produce power<br>• Syngas Feed – 1 MMSCFD @ 40 barg<br>• Selective $H_2S$ & $CO_2$ removal<br>• Started-up in 2012 |

| PROJECT | DETALS |
|---|---|
| Orlando Gasification Project (USA) | • IGCC Plant<br>• Sub-Bit Coal<br>• Electricity Generation<br>• Started up in 2010 |
| Orange Country Florida Project | • IGCC Plant<br>• Sub-Bit Coal<br>• Electricity Generation<br>• Started-up in 2010 |
| Kingsport IGCC Plant (USA) | • Bit. Coal<br>• Electricity Generation<br>• Started-up in 2007 |
| Gilberton Coal-To-Clean Fuel Plant (USA) | • Anthracite Coal<br>• Diesel and Electricity<br>• Started-up in 2004 |
| Gdansk (Poland) | • IGCC Plant<br>• Visbreaker residue<br>• Electricity , $H_2$ and Steam<br>• Started-up in 2005 |
| Chawan IGCC plant (Singapore) | • Residual Oil<br>• Electricity , $H_2$ and Steam<br>• Started-up in 2001 |
| PIEMSA (Spain) | • Visbreaker Tar<br>• Electricity and $H_2$<br>• Started-up in 2006 |
| Fife Electric (UK) | • Coal and Sludge<br>• Electricity<br>• Started-up in 2005 |
| Normandie (France) | • IGCC plant<br>• Fuel Oil<br>• Electricity , $H_2$ and Steam<br>• Started-up in 2005 |

## 2.4 IGCC Process Description

IGCC process consists of six major units namely gasification unit (GU), water gas shift reactor (WGS), air separation unit (ASU), acid gas removal section (AGR), heat recovery steam generation (HRSG), and combined cycle (CC). Figure 1 shows the general IGCC process scheme.

First part of an IGCC process involves the chemical conversion of coal into syngas which is a mixture of carbon monoxide and hydrogen. This conversion is carried out in gasification unit that uses high purity oxygen and steam. As the syngas leaves gasifier, it must be cleaned from impurities and other contaminants like sulfur prior to its combustion in gas turbine for power generation. Gas turbines are considered as the main power generation units in IGCC power plants. Gas turbines are further connected with heat recovery steam generation section where the hot exhaust from gas turbine passes through series of heat exchangers to generate high pressure steam in order to run the steam turbines. Steam turbines and gas turbines are associated with the electric generators to generate electricity.

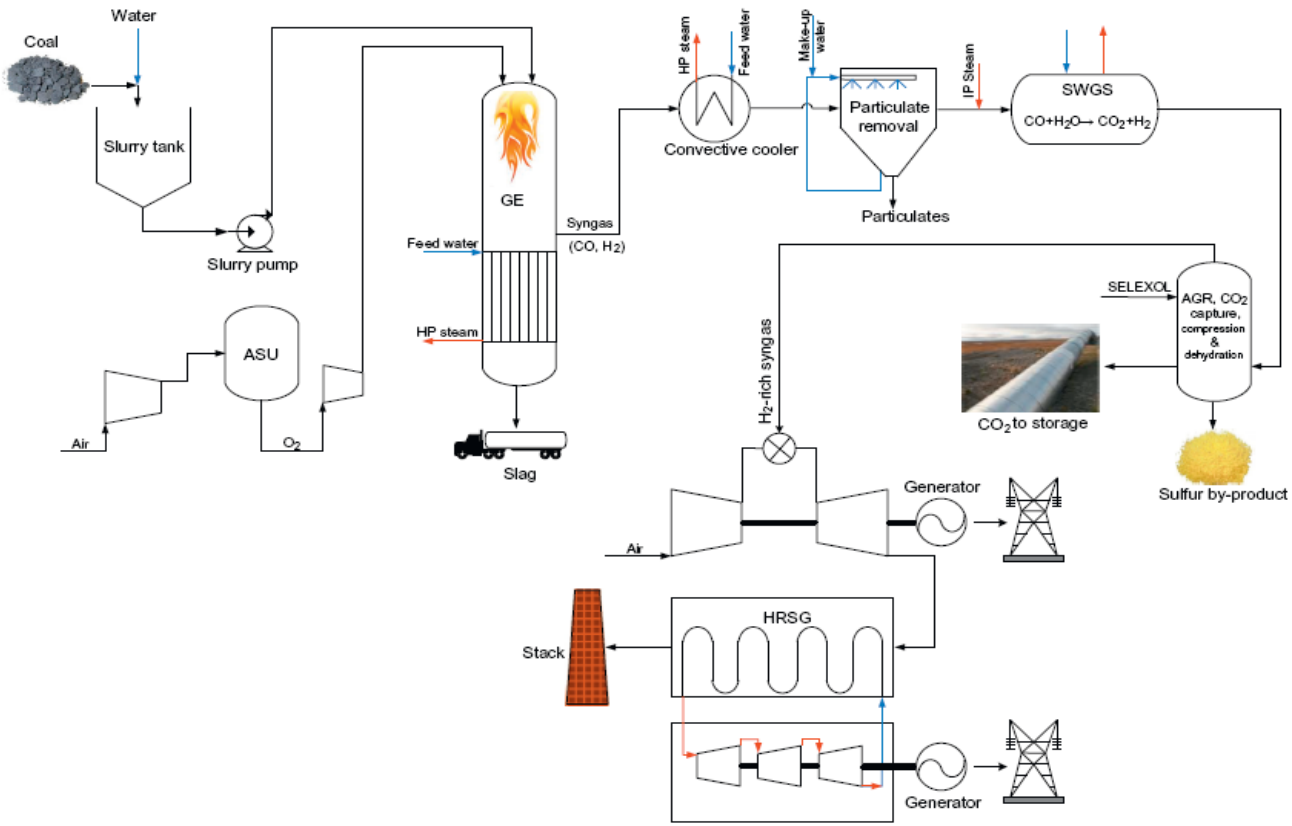


*Figure 1: IGCC simplified Block Diagram [32]*

### 2.4.1 Gasification Process

The heart of the IGCC plant is its gasification unit, which is also termed as gasifier. Various types of gasifiers are commercially available depending upon the type of feedstock used and other downstream processes involved in an IGCC power plant.

Gasification unit mainly includes gasifier and the coal feeding system. Coal can be fed to the gasifier in two ways either in dry mode or in slurry mode. In dry mode nitrogen is usually used for conveying the coal particles to gasifier whereas in slurry mode coal is grinded in presence of water to obtain a coal water slurry. During gasification process solid (coal, biomass, carbonaceous material) or liquid fuel is converted into syngas through sub-stoichiometric reaction with oxygen or air between temperature ranges of 450-1650°C. Syngas is a mixture of carbon-mono oxide (CO), hydrogen ($H_2$), carbon dioxide ($CO_2$) and water ($H_2O$). In gasification process, non-volatile char is also converted into an additional syngas that would remain un-converted during pyrolysis process. Additional steam can be added in the gasifier along with coal to increase syngas generation. Some of the important gasification reactions are shown in the equations below:

$$Volatiles + \left(x + \frac{1}{2}y\right) O_2 \rightarrow xCO_2 + yH_2O \qquad (1)$$

$$C_{(s)} + H_2O \leftrightarrow CO + H_2 \quad +131 \text{ MJ/kmol} \qquad (2)$$

$$C_{(s)} + CO_2 \leftrightarrow 2CO \qquad +172 \text{ MJ/kmol} \qquad (3)$$

$$C_{(s)} + \frac{1}{2}O_2 \rightarrow CO \qquad -111 \text{ MJ/kmol} \qquad (4)$$

$$CO + \frac{1}{2}O_2 \rightarrow CO_2 \qquad -283 \text{ MJ/kmol} \qquad (5)$$

$$H_2 + \frac{1}{2}O_2 \rightarrow H_2O \qquad -242 \text{ MJ/kmol} \qquad (6)$$

Syngas formation reactions are highly exothermic in nature so gasifiers are associated with radiant and convective heat exchangers. Syngas can be either burned in the gas turbine to generate power or it can be further processed to manufacture chemicals, liquid fuels, synthetic gas or hydrogen.

Recently many countries are using gasification techniques to convert the biomass and municipal waste into valuable products. Gasification technology has been currently used in the production of ammonia, hydrogen, methanol, oxo-alcohols, synthetic natural gas (SNG), liquefied petroleum gas (LPG) and other Fischer-Tropsch fuels [18]. Figure 2 shows the gasification capacity by regions where Asia is at the top of list. Currently more than 272 gasification plants are operating worldwide with more than 686 gasifiers and more than 74 plants are still under construction with about 238 gasifiers [19].

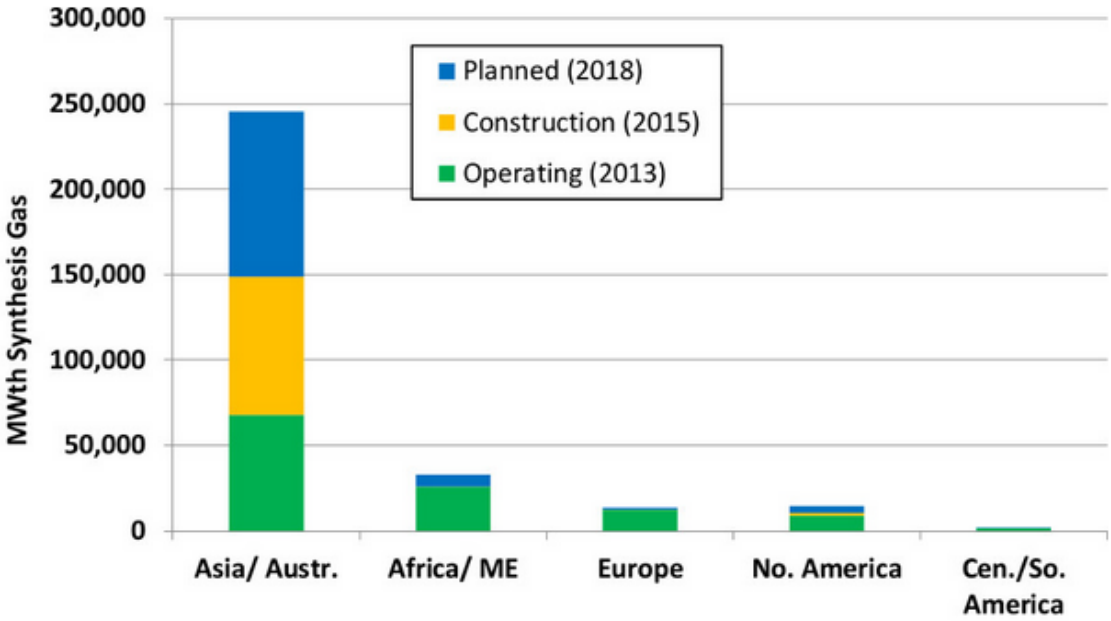


*Figure 2: Gasification capacity by Geographic Region [19]*

### 2.4.1.1 Types of Gasifiers

#### 1) Moving bed gasifier

It is the simplest and oldest type of gasifier that can be operated at an atmospheric pressure. Moving bed gasifier has three zone i.e drying, gasification and combustion. Coal is fed from top of the gasifier whereas the oxygen/air is introduced from bottom. It can be operated in either dry-ash mode or the slagging mode. This gasifier offers larger residence time of feedstock and oxidant which results in formation of methane gas in syngas. Due to less oxidant consumption in gasifier, the efficiency is usually higher. The syngas formed in the gasifier is at a low pressure with a temperature range of 425-650°C. Coarse coal

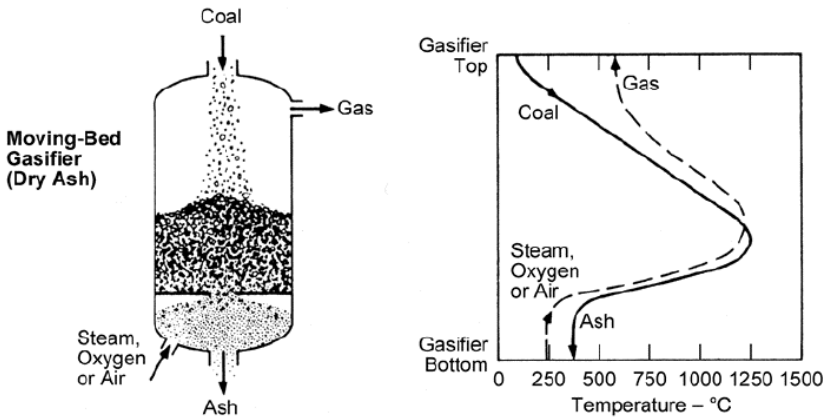


*Figure 3: Moving bed gasifier [5]*

particles have to be used to enhance bed permeability and to avoid chemical burning and pressure drop.

## 2) Fluidized bed gasifier

Fluidized bed gasifiers usually use high pressure oxygen/steam to suspend coal particles in the reactor bed. These type of gasifiers can be only used if coal is grinded to a very small size (<6mm) to withstand the fluidization process. Fluidization can be achieved by feeding a high pressure oxidant or steam from the bottom of gasifier. These gasifiers usually operates at high temperatures to achieve 90-95% of carbon conversion. However the temperatures are kept below the ash fusion temperature to avoid clinker formation that may result in de-fluidization. Fluidized bed gasifiers are associated with cyclone separators attached at the top of the gasifier that recycles the entrained

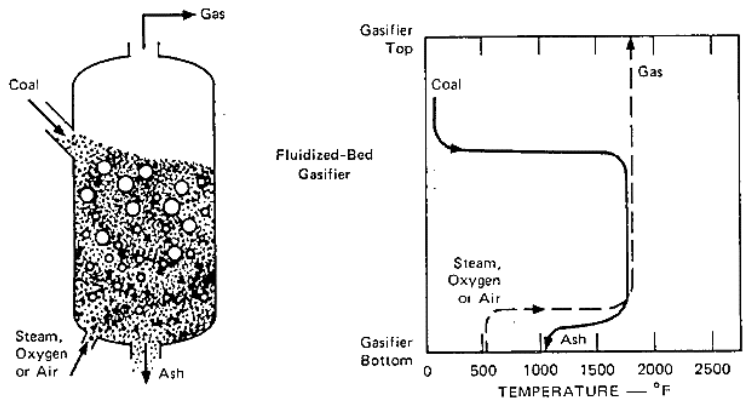


*Figure 4: Fluidized bed gasifier [5]*

char particles with syngas. The syngas formed in this type of gasifier has a temperature range of 900-1050°C. These type of gasifiers are mostly used for reactive and low rank coals.

## 3) Entrained flow gasifier

Entrained flow gasifiers are best used in the coal-gasification applications as it allows all types of coals to gasify regardless of their rank and caking characteristics. They can be operated in either dry mode or slurry mode. Slurry mode allows the formation of syngas with higher hydrogen and carbon-monoxide ratio. The coal and oxidant are fed co-currently at higher pressures resulting in turbulent flow leading to more than 99.5 % carbon conversion to syngas. The oils, phenols and other undesirable compounds formed in de-volatilization zone are readily decomposed to hydrogen and carbon-monoxide. The syngas formed in entrained flow gasifiers have a pressure and temperature range up to 6.5MPa and 1600°C respectively.

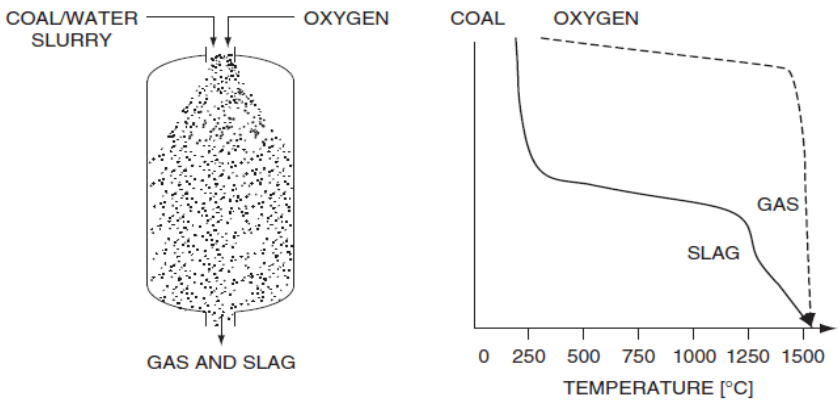


*Figure 5: Entrained flow gasifier [5]*

### 2.4.1.2 Comparison of gasification technologies

| Category | Moving-bed | | Fluid-bed | | Entrained-flow |
|---|---|---|---|---|---|
| Ash conditions | Dry bottom | Slagging | Dry ash | Agglomerating | Slagging |
| Typical processes | Lurgi | BGL | Winkler, HTW, KBR, CFB, HRL | KRW, U-Gas | KT, Shell, GEE, E-Gas, Siemens, MHI, PWR |
| **Feed characteristics** | | | | | |
| Size | 6–50 mm | 6–50 mm | 6–10 mm | 6–10 mm | <100 µm |
| Acceptability of fines | Limited | Injection through tuyères | Good | Better | Unlimited |
| Acceptability of caking coal | Yes (with stirrer) | Yes (with stirrer) | Possibly | Yes | Yes |
| Preferred coal rank | Any | High | Low | Any | Any |
| **Operating characteristics** | | | | | |
| Outlet gas temperature | Low (425–650°C) | Low (425–650°C) | Moderate (900–1050°C) | Moderate (900–1050°C) | High (1250–1600°C) |
| Oxidant demand | Low | Low | Moderate | Moderate | High |
| Steam demand | High | Low | Moderate | Moderate | Low |
| Other characteristics | Hydrocarbons in gas | Hydrocarbons in gas | Lower carbon conversion | Lower carbon conversion | Pure gas, high carbon conversion |

*Figure 6: Characteristics of different gasification technologies [5]*

#### 2.4.1.3 Feed Stock Considerations

IGCC process can handle wide variety of feed stocks ranging from coal to biomass waste [20]. Coal is one of the largest source for gasification process and will remain dominant feedstock due to its abundance in nature [21]. Still there are some gasification plants in the world which are using oil as feedstock however their number has dropped with the increase in crude oil prices [19]. Gasification also allows the use low rank coal which otherwise cannot be used in post combustion power plants due to its low heating value and high amount of impurities. Low grade coal is often blended with high grade coal for co-production of hydrogen and electricity [8] [22].

From Figure 7 it can be seen that the number of planned gasifiers will be based on coal. However biomass and waste feedstock has recently got attention and it is expected to increase in future. Each year bulk of world's municipal waste is disposed of in landfills. By using the gasification techniques, it can be converted to electricity or other valuable products.

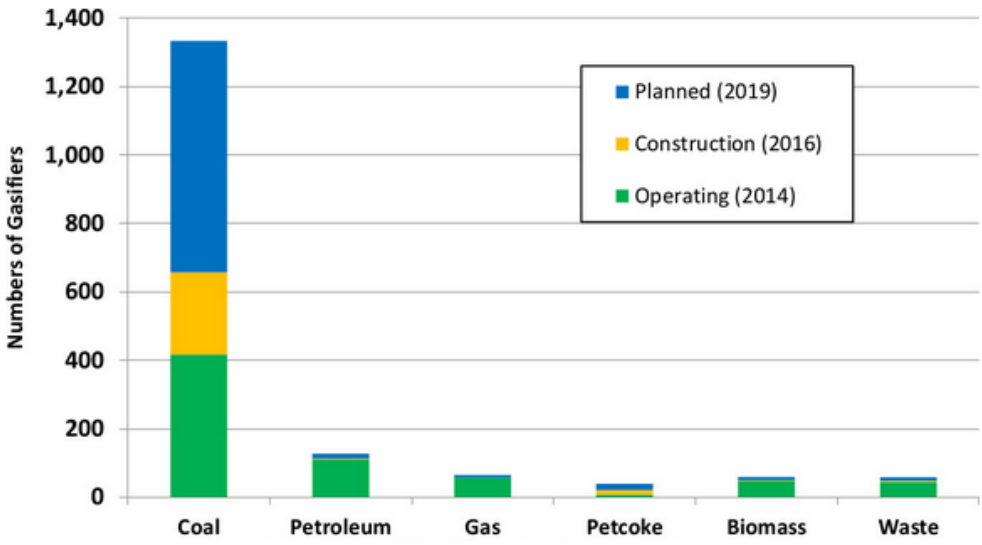


Figure 7: Number of gasifiers by Primary Feedstock [19]

### 2.4.2 Air Separation Unit

Air separation unit (ASU) is used for the production of high purity oxygen for gasification process. It is also one of the most expensive part of the IGGC project which together with compressors imparts about 10-15% of total plant cost. About 5-7% of the total power generated in IGCC plant is utilized by ASU during air compression. There are several technologies available for air separation process as shown in Figure 8. However the most extensively and large scale air separation units are based on cryogenic air separation technique. Cryogenic plants can have the oxygen production capacity of more than

3900t/d with the oxygen purity level of above 99%. Pressure swing adsorption units can be employed for a small scale plants (140t/d) where oxygen purity up to 95% is acceptable [23]. More over polymeric membranes are currently gaining a lot of research attention but their capacity of oxygen production is still very low.

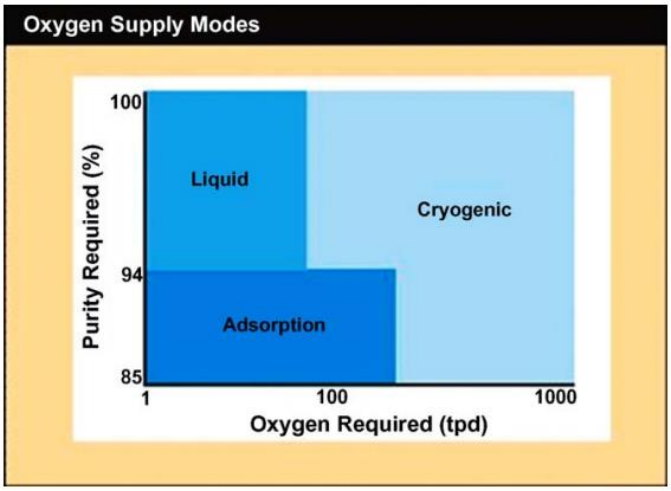


*Figure 8: Oxygen Production Process [23]*

IGCC power plants consumes huge amount of oxygen and nitrogen at elevated pressures so cryogenic air separation technology is usually used. Depending upon the oxygen purity requirements and delivery pressure, the energy consumption of the ASU also varies. ASU can be further divided into low-pressure (LP) ASU and elevated-pressure (EP) ASU based on their

operating pressures [24]. Some of the operating parameters for LP-ASU and EP-ASU are shown in the Table 4.

*Table 4: Operating parameters of elevated and low pressure ASU*

| Component | Pressure (atm) | EP ASU Temperature (C) | LP ASU Temperature (C) |
|---|---|---|---|
| $N_2$ | 4 - 7 | -- | Minus 174 – minus 181 |
| $O_2$ | 4 - 7 | -- | Minus 159 – minus 167 |
| $N_2$ | 10-14 | Minus 153 – minus 148 | -- |
| $O_2$ | 10-14 | Minus 164 – minus 169 | -- |

The cryogenic air separation unit is usually associated with the main air compressor and a pre-purification unit. Air is compressed to an elevated pressure and passed through a series of molecular sieves to remove moisture and dust particles. It is then cooled to its liquefaction temperature and distilled into two main constituents, oxygen and nitrogen. These separated products can be kept into the liquid form or heated to get vapors as required by the process [23]. The simplified flow scheme of an ASU is shown in Figure 9.

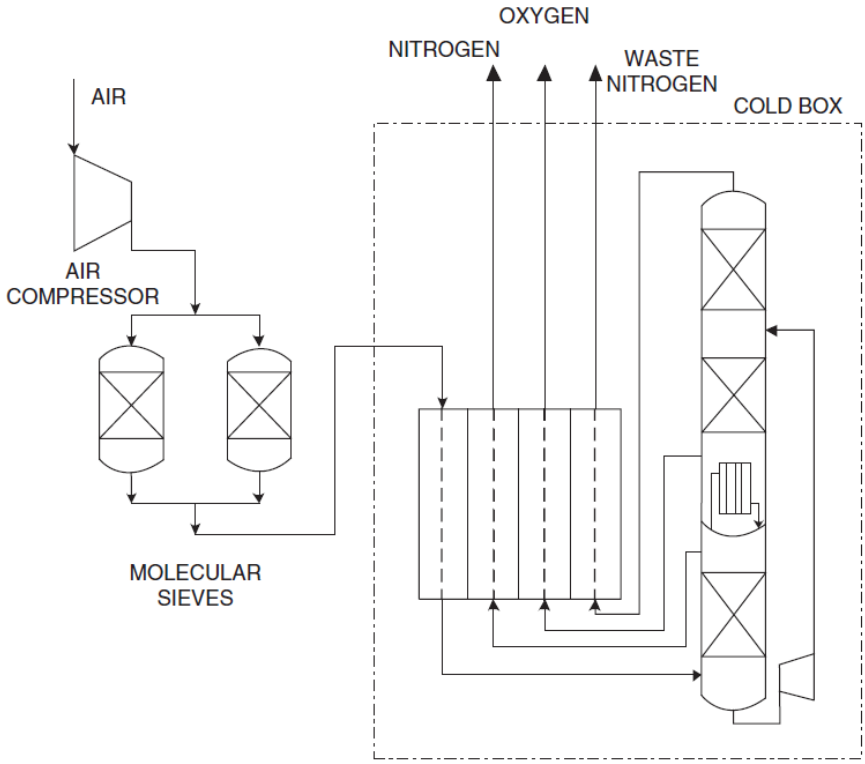


*Figure 9: Simplified air separation unit (ASU) flow scheme [5]*

### 2.4.3 Water Gas Shift Rectors

Water gas shift (WGS) conversion is a chemical reaction that converts CO and $H_2O$ to an equivalent amount of $H_2$ and $CO_2$ in the presence of catalyst. WGS reactions are stoichiometric in nature as shown in Equation (7) however concentration of steam is usually kept high to achieve maximum CO conversion and to maintain reactor bed temperature. Coal gasification power plants leads

to high volume of CO in the syngas, so steam requirements are significantly increased in order to maintain the minimum inlet steam/CO ratio. These reactions are exothermic in nature so their equilibrium constant decreases with the increase in temperature thereby low CO conversion is achieved at elevated temperatures. However these reactions are faster at high temperatures.

$$CO + H_2O \rightarrow H_2 + CO_2 \qquad \Delta H = -41 \text{ KJ/mole} \qquad (7)$$

Depending upon the $H_2S$ concentration in the syngas, WGS reactions can be carried out in two ways i.e. sweet shift or sour shift. Both of these processes are shown in Figure 10. If the sulfur ($H_2S$) is removed from syngas prior to the WGS reactor, it is called sweet shift conversion whereas if the sulfur ($H_2S$) is removed after WGS reactor then it is called as sour shift conversion process. Furthermore shift reactions are usually carried out in two reactors i.e high temperature shift reactor (HTS) and low temperature shift reactor (LTS), installed in series with an intermediate heat exchanger to remove heat. Usually 90% conversion of CO is achieved in the HTS reactor whereas the remaining conversion is achieved in LTS.

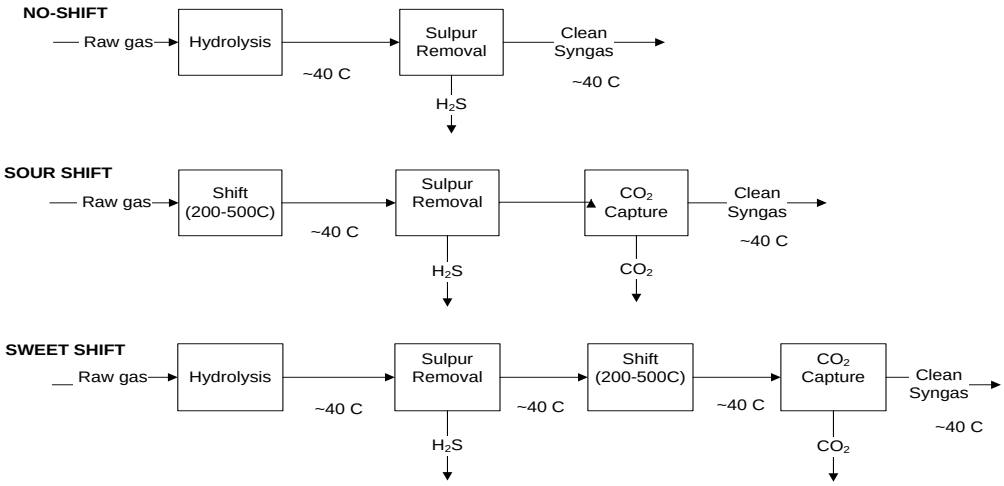


*Figure 10: Comparison of Sour and Sweet shift catalytic process*

WGS reactions are carried out in the presence of catalyst and several types of WGS catalyst are commercially available, however the three most commonly used are shown in Table 5. The sour shift process is more energy efficient as compared to sweet shift because no alternate heating and cooling is required in the process. In sweet shift process, syngas is cooled to 40°C for sulfur removal and then reheated to 200°C for shift reactions and then again cooled to 40°C for $CO_2$ removal. Due to alternative heating and cooling requirements for the process conditions, heat losses occur during each transition.

*Table 5: Catalyst used for Sweet shift and Sour shift reaction*

| | **Active Component** | **Operating Temperature (°C)** | **Sulphur content (ppm)** |
|---|---|---|---|
| **HTS Catalyst** | $Fe_3O_4$ with $Cr_2O_3$ | 350-500 | < 20 |
| **LTS Catalyst** | Cu with Zn and $Al_2O_3$ | 185-275 | < 0.1 |
| **Sour Shift Catalyst** | Sulphided Co and Mo (CoMoS) | 250-500 | > 1000 |

### 2.4.4 Acid Gas Removal Section

Gasification of coal produces syngas that must be treated prior to its utilization. Acid gas removal (AGR) section mainly contains $H_2S$ removal section and the $CO_2$ removal section. Environmental target of IGCC power plants is 0.0128lb $SO_2$/MMBtu, which requires the sulfur content in syngas to reduce by 30ppmv [25].

There are several commercially available processes that can be used to remove acid gases. These processes can be differentiated on the type reagents used: chemical solvents, physical solvents or hybrid solvents [25] [26]. Some of the chemical and physical reagents are shown in Table 6 and Table 7.

*Table 6: Chemical Reagents used in AGR process [25]*

| Chemical Reagent | Acronym | Process Licensors |
|---|---|---|
| Monoethanolamine | MEA | Dow, Exxon, Lurgi, Union Carbide |
| Diethanolamine | DEA | Elf, Lurgi |
| Diglycolamine | DGA | Texaco, Fluor |
| Triethanolamine | TEA | AMOCO |
| Diisopropanolamine | DIPA | Shell |
| Methyldiethanolamine | MDEA | BASF, Dow, Elf, Snamprogetti, Shell, Union Carbide, Coastal Chemical |
| Hindered amine | | Exxon |
| Potassium Carbonate | "hot pot" | Eickmeyer, Exxon, Lurgi, Union Carbide |

Chemical solvents are more suitable than physical solvents for the processes operating at ambient pressures. The chemical nature of solvents make solution loading and circulation less dependent on the partial pressure of the acid gases. Moreover as the solution is aqueous, co-absorption of hydrocarbons are minimal. For example, in conventional amine unit, the chemical solvents reacts exothermically with an acid gas. They usually makes a weak bond that can be easily broken during regeneration process. Each chemical solvent has its own operating conditions. The absorption temperature is kept below 50°C however the regeneration temperature is usually 130°C. The major advantage of this process is that it allows to remove acid gas to low level at moderate

partial pressure. However main disadvantage of this process includes higher regeneration energy of solvent and re-boiler's heat duty.

*Table 7: Physical Solvents used in AGR process [25]*

| Solvent | Trade Name | Process Licensors |
|---|---|---|
| Dimethyl ether of poly-ethylene glycol | Selexol | UOP |
| Methanol | Resticol | Linde AG and Lurgi |
| Methanol and toulene | Resticol II | Linde AG |
| N-methyl pyrrolidone | Purisol | Lurgi |
| Polyethylene glycol and dialkyl ethers | Sepasolv MPE | BASF |
| Propylene carbonate | Fluor Solvent | Fluor |
| Tetrahydrothiophenedioxide | Sulfolane | Shell |
| Tributyl phosphate | Estasolvan | Uhde and IFP |

Physical solvents are organic in nature and have high solubility for acid gases. These solvents work on the basis of Henry's Law. Higher the partial pressure of acid gas in syngas, higher will be the absorption. The pressure swing absorption technique is employed where absorption takes place at elevated pressure whereas desorption takes place by reducing pressure in multistage flash drums. Physical solvents operates at lower temperature as compared to the chemical solvents so solvent refrigeration is often required to enhance the absorption rate. In IGCC process, acid gases in the syngas are at higher partial

pressures so physical solvents are used for their efficient removal. A simplified flow diagram of the AGR section is shown in Figure 12.

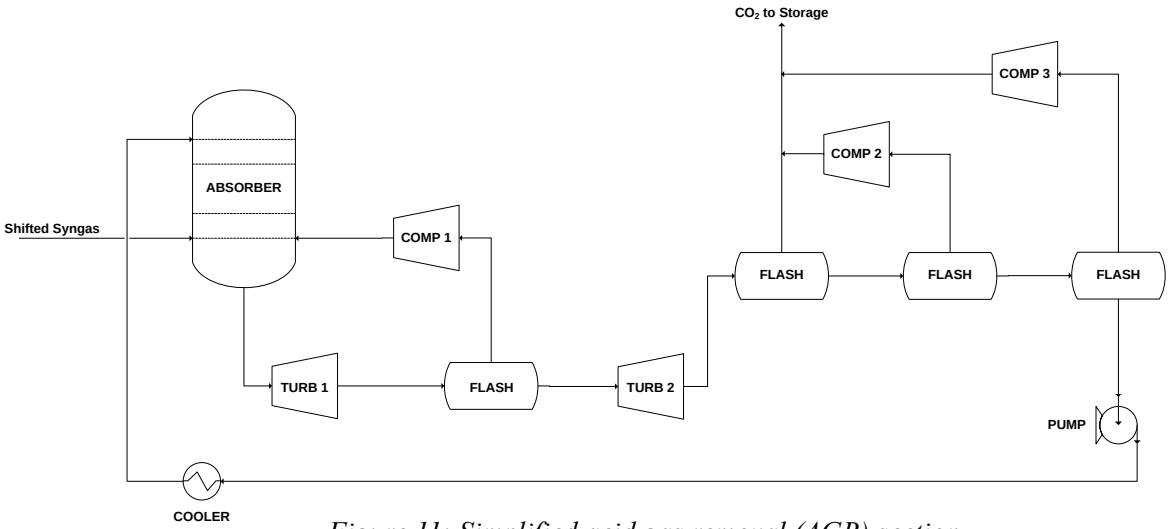


*Figure 11: Simplified acid gas removal (AGR) section*

## 2.4.5 Combined Cycle (Gas Turbine & Steam Turbine)

The CC section is responsible for electricity generation where Brayton and Rankine cycles are integrated to achieve higher efficiencies with maximum power output. It comprises of topping gas turbines section and bottoming steam turbine and heat recovery steam generation (HRSG) section. The simplest flow diagram of CC is shown in Figure 12. The gas turbine unit consist of combustor, compressor and a gas turbine. The air/oxidant is compressed and introduced into the combustion chamber where syngas combustion takes place. The flue

gas produced in combustion chamber with a high pressure is fed to gas-turbine to convert its pressure energy into shaft work. To achieve higher efficiency of the CC, gas turbines are associated with complex heat recovery steam generation cycle (HRSG) section involving multiple pressure boilers and steam turbines. Combined cycles with only electricity power have thermal efficiencies between 50-60% using advanced gas turbines.

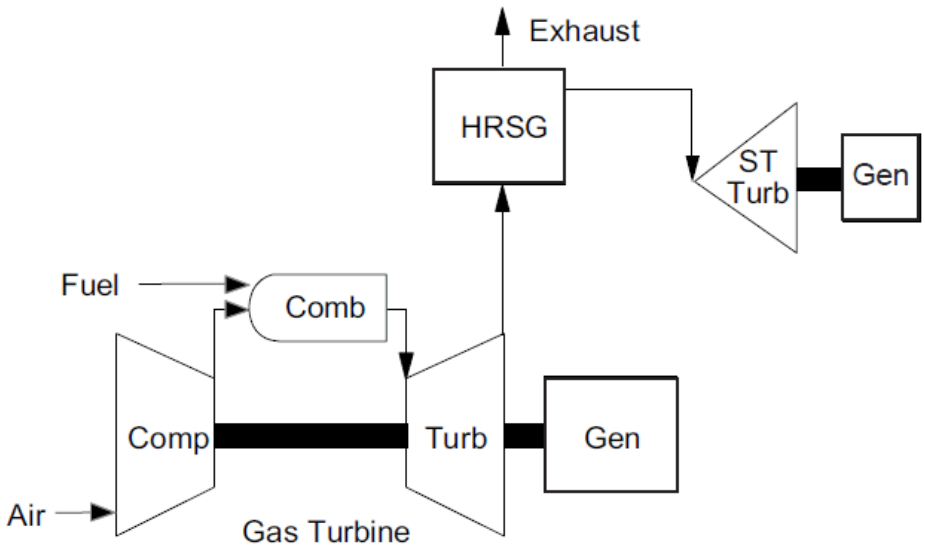


*Figure 12: Combined Cycle flow diagram*

The modern gas turbines can withstand the temperature up to 1600°C however typical operating range of temperature for gas turbines is maintained at 1350°C to avoid $NO_x$ production. To increase the life time of turbine blades, temperature of flue gas entering the gas turbine is controlled by injecting excess

air or nitrogen. Moreover moisture content in the flue gas should be maintained less than 12-15% to avoid erosion of turbine blades. Depending upon the gas turbine efficiency and pressure ratio, flue gas comes out of the gas turbine at a temperature range of 450-650°C. It is then passed through the series of heat exchangers and boilers to generate steam. The steam cycle consists of heat recovery steam generation (HRSG) section, steam turbine with alternator, cooling system and an auxiliary system. HRSG is entirely a convective heat exchanger package that consists of tubes having pressurized steam or water on the tube side with an exhaust gas on the shell side. The process involves an economizer that raises the temperature of water close to its boiling point. Economizer is followed by boiler to generated saturated steam which is further followed by super heaters to generated superheated steam.

HRSG section is designed on the basis of pinch point and minimum approach temperature differences to utilize heat efficiently and effectively. The smaller pinch point reflects the higher efficiency of steam cycle however the approach temperature range is kept between 5-12°C. Steam turbines are similar to gas turbines however the working fluid for either turbine is different. In a steam turbine high enthalpy (high pressure and temperature) steam is expanded in nozzles where the kinetic energy of steam particles is increased at the expense of decreasing pressure. The expansion of steam in steam turbine is performed in several stages associated with steam reheating and moisture

removal mechanism prior to enter in the next stage. However in gas turbine, high pressure exhaust of flue gas is passed through turbine blades and its pressure energy is converted into shaft work to generate electricity.

In IGCC power plants, gas turbines are considered as the main electricity generation units. However these turbines are different in manufacturing from the gas turbines as they use low BTU syngas as a fuel. Therefore these turbines typically have large assemblies and associated equipment for handling large volumes of syngas to maintain process conditions [27]. Moreover keeping in view the economics of process, gas turbine section is the most expensive part of an IGCC power plant so advances in gas turbines has a potential to both increase efficiency of power plant and to decrease cost of electricity. Heavy duty “F class” turbines are currently the state of art technologies that are used in refineries and IGCC power plants [28].

# Chapter 3. Methodology

## Design Basis:

The IGCC process simulation with $CO_2$ capture has been made in Aspen Plus® using Peng-Robinson equation of state. Coal is an un-conventional component so it has been modeled using Illinois No 6 coal based on Proximate, Ultimate and Sulfanal analysis as shown in Table 8.

*Table 8: Illinois coal # 6 analysis [29]*

| **Proximate Analysis** | **Wt % (As Received)** | **Wt % (Dry)** | **Ultimate** | **Wt % (As Received)** | **Wt% (Dry)** |
|---|---|---|---|---|---|
| Moisture | 11.12 | | Moisture | 11.12 | |
| Fixed Carbon | 44.19 | 49.72 | Ash | 9.7 | 10.91 |
| Volatiles | 34.99 | 39.37 | Carbon | 63.75 | 71.72 |
| Ash | 9.7 | 10.91 | Hydrogen | 4.5 | 5.06 |
| Total | 100 | 100 | Nitrogen | 1.25 | 1.41 |
| HHV (MJ/kg) | 27.13511 | 30.53107 | Chlorine | 0.29 | 0.33 |
| LHV (MJ/kg) | 25.88 | | Sulfur | 2.51 | 2.82 |
| | | | Oxygen | 6.88 | 7.75 |
| **Sulfur Analysis in Illinois # 6 Coal** | | | | | |
| Sulfur Type | Pyritic | Sulfate | | Organic | |
| Dry Basis, Wt % | 1.7 | 0.02 | | 1.1 | |

Coal is grinded and mixed with water to form slurry in various weight fractions. A mixture of Selexol solvent (DEPG) with water is been used for capturing $CO_2$ and $H_2S$ from syngas. Three case studies of IGCC process scheme have been developed and compared in terms their efficiencies,

economics and emissions. Table 9 shows all designing parameters used in the simulation.

*Table 9: Design Assumptions*

| Unit/Component/System | Modelling Unit | Parameters |
|---|---|---|
| Coal Flow Rate | Mixer | 3845 tons/day<br>70% coal water slurry ratio<br>(70% coal and 30%water) |
| Gasification Reactor | RYield, RGibbs<br>( Reactor ) | GE ( General Electric )<br>Flow regime: Entrained Flow<br>Ash type: Slag<br>Temperature: 1550°C<br>Pressure: 32 bar<br>Pressurization mode: Slurry Pump<br>Carbon Conversion~ 98% |
| Air Separation Unit (ASU) | HeatX, Compr | Oxygen Purity 95% (vol)<br>Power Consumption: 175 kWh/t |
| Shift Conversion (WGS) | RGibss Reactor | Sour Catalyst ( Co-Mo)<br>2 Adiabatic reactors<br>Steam/CO: ~2<br>CO conversion ~ 98% |

| | | |
|---|---|---|
| $H_2S$ removal Section | RadFrac | Selexol Solvent<br>$H_2S$ removal ~ 99.9%<br>Absorber Stages: 25<br>Regeneration Stages: 22<br>Solvent Regeneration : Thermal |
| $CO_2$ removal Section | RadFrac | Selexol Solvent<br>$CO_2$ removal > 90%<br>Absorber stages: 20<br>Solvent Regeneration: PSA<br>Flashing : (13.78, 3.44, 1.01, 0.3) bar |
| Pump Efficiency | Pump | 0.85 % |
| Compressor Efficiency | Compr | 0.82 % |
| Steam Turbine Efficiency (Isentropic) | Compr | 87.5 % |
| Gas Turbine Efficiency (Adiabatic) | Compr | GE 7FA<br>85 % |
| $CO_2$ Delivery Pressure | Compr | 80 bar |
| Heat Recovery Steam Generation (HRSG) | HeatX, Compr | 12.52 / 6 / 2.9 / 0.45 MPa |

### 3.1.1 Base Case Design (Case 1 )

Base case design is a conventional IGCC process as shown in Figure 13 with $CO_2$ capture scheme. Coal water slurry is made and pumped into an entrained flow gasifier at the pressure of 32 bar. Coal water slurry undergoes gasification reactions to generate syngas on reacting with high purity oxygen. The syngas leaves the gasifier at a temperature of 1550°C and is cooled to 250°C in HRSG section to carry out WGS reactions. Medium pressure steam is mixed with syngas and the stream is passed over Co-Mo catalyst to carry out sour WGS reactions. Sour WGS reactions are carried out in two stages. 90% of CO conversion to $H_2$ is achieved in first stage whereas rest conversion is accomplished in 2$^{nd}$ stage. $H_2S$ and $CO_2$ is removed from syngas by Selexol solvent solution. The $CO_2$ separated in this process has a pressure of 4 bar which is finally raised to transport pressure of 80 bar. After removal of acid gases, mainly hydrogen is left in the main stream which is combusted by air. Excess air is used in this process to control the combustor temperature. High pressure exhaust from the combustor is then fed into gas turbine to convert pressure energy into shaft work. The exhaust leaves the gas turbine at a temperature range of 450-650 °C so it is passed through HRSG section to generate steam which in turn run steam turbines to generate electricity. Finally the flue gas is released into the atmosphere at a stack temperature of 65°C.

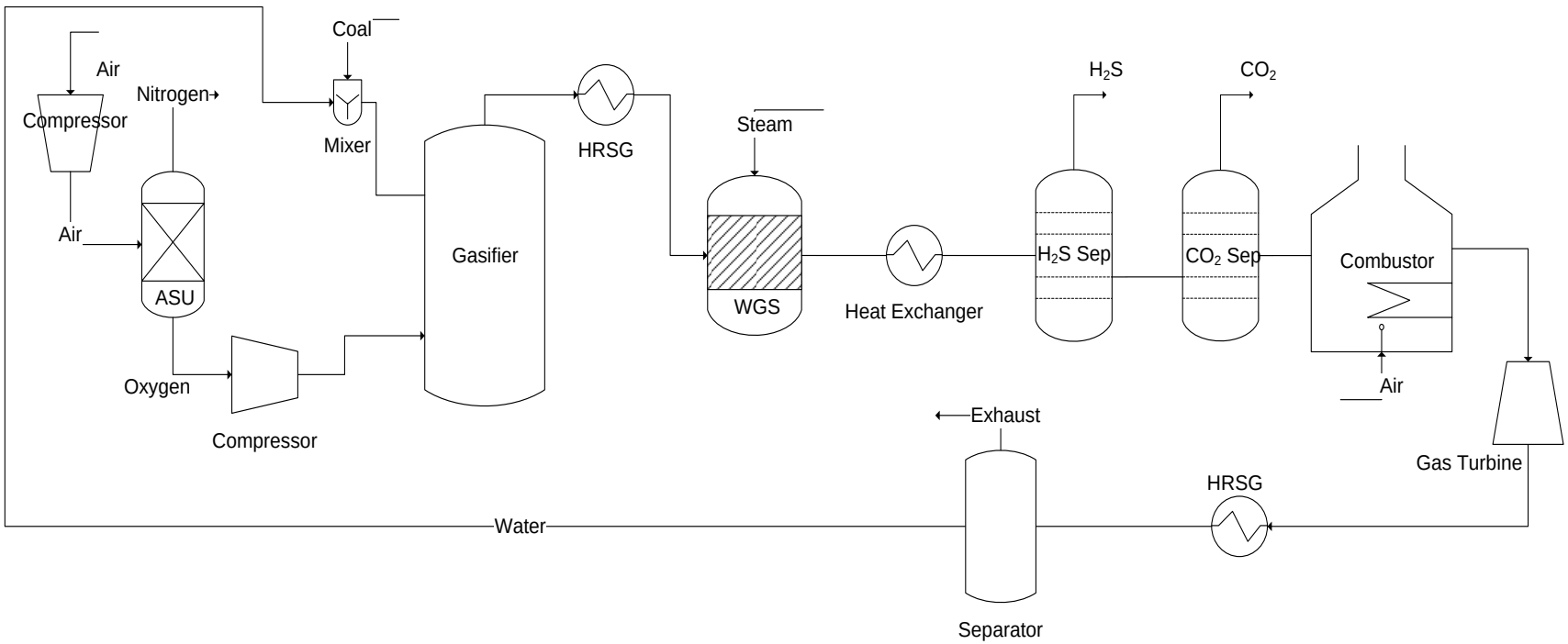


*Figure 13: IGCC design with WGS reactor (Combustion oxidant: air, Combustor temp control: air)*

### 3.1.2 Modified IGCC design options

## Case 2

Second case is shown in Figure 14 which is very much similar to the base case design. It is also based on sour water gas shift reactions however main differences lies in the combustion section. Some of the key differences are given as follows:

1. High purity oxygen is used for the combustion of hydrogen gas in combustion section instead of air.
2. $CO_2$ is used for controlling the temperature of the combustor.

This case study is developed in order to analyze the effect of using high purity oxygen for combustion instead of air. By using high purity oxygen, thermal efficiency of the process is expected to increase however oxygen production energy also increases at the same time. In this case study, the generated hydrogen gas is burned using high purity oxygen therefore possible by-product of combustion will be only steam. As hydrogen is a highly flammable gas so combustor temperature is controlled by using recycled $CO_2$. While comparing it with the base case design, less amount of $CO_2$ is required to control combustor temperature instead of air therefore compression energy of the process is expected to reduce. The generated flue gas at a high pressure is fed to the gas turbine section to generate electricity followed by HRSG section where the steam is condensed to water and $CO_2$ is separated. The separated water is send

to coal water slurry section whereas $CO_2$ is re-compressed and send to the combustion section. As compared to the base case design, this case consumes great amount of oxygen.

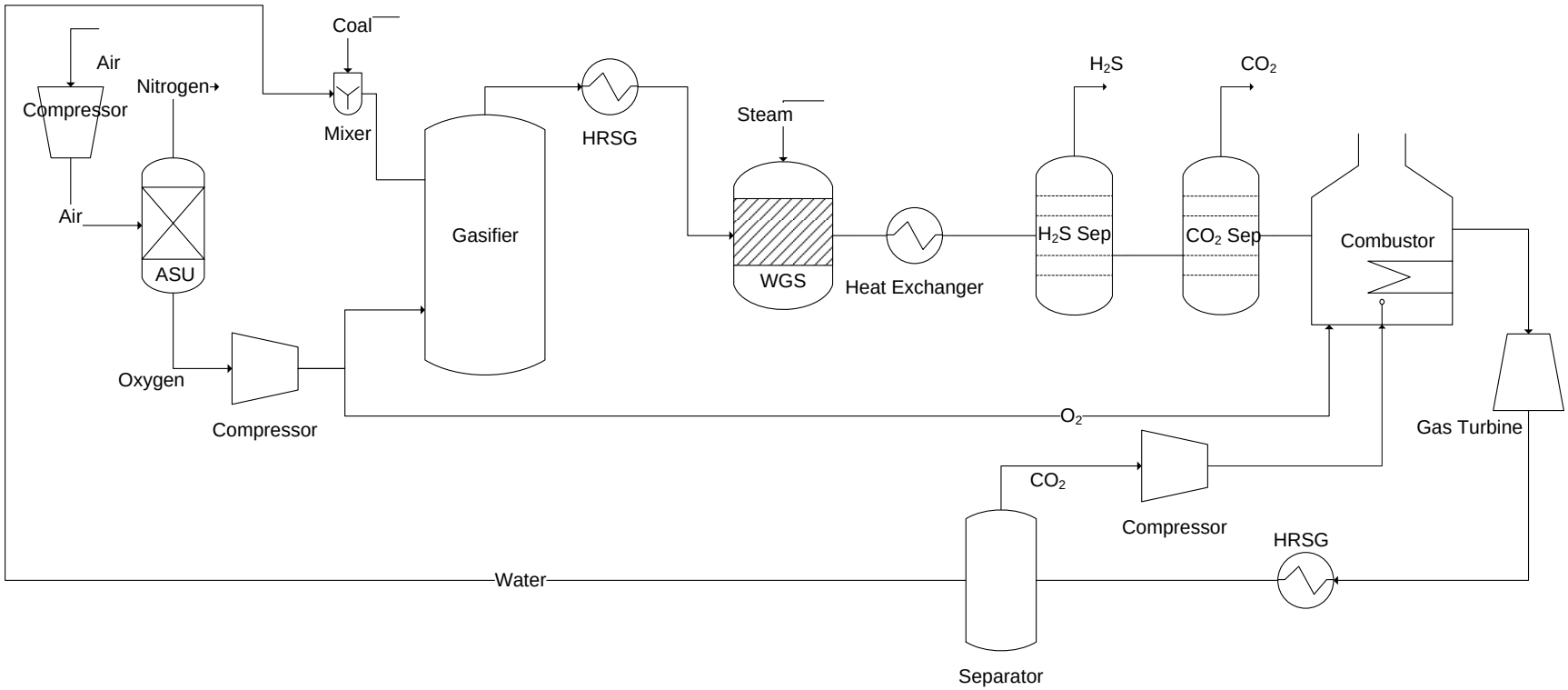


*Figure 14: IGCC design with WGS reactor (Combustion oxidant: $O_2$, Combustor temp control: $CO_2$)*

## Case 3

Third case design is different from the other two cases as shown in Figure 15. Some of the key differences are given as follows:

1. It do not include WGS reactors.
2. It do not include $CO_2$ capture system.
3. Oxygen is used for syngas combustion.
4. Recycled $CO_2$ is used for combustor temperature control.

This case study is developed to minimize the thermal energy losses occurring in sub sections of an IGCC process. The losses may occur due to poor heat integration or inefficient hydrogen generation processes associated with WGS section. Moreover, this case study doesn't include any $CO_2$ capture unit so the losses in syngas heating value is also reduced. As intermediate pressure steam is used to carry out WGS reactions in case 1 and case 2, huge amount of steam has to be continuously fed to WGS reactors that ultimately reduces steam cycle efficiency. Therefore WGS reactors are removed in this process and resulting syngas containing both $H_2$ and CO is burned by pure oxygen making it similar to an oxy-fuel combustion process. The flue gas from combustor is passed through series of gas and steam turbine sections where steam is condensed to water and pure $CO_2$ is obtained while flashing. Due to oxy-fuel nature of this process, it is expected to have the highest thermal and steam cycle efficiency. As the products of combustion in this case will be $CO_2$ and steam so

recycled stream of $CO_2$ is used in the process to control combustion temperature. In this case study, excess air can neither be used for syngas combustion nor can it be used for burner temperature control in order to avoid $CO_2$ dilution with $N_2$. A part of $CO_2$ is compressed and send to the combustion section again for temperature control while the rest of $CO_2$ is dehydrated and compressed to a transport pressure of 80 bar.

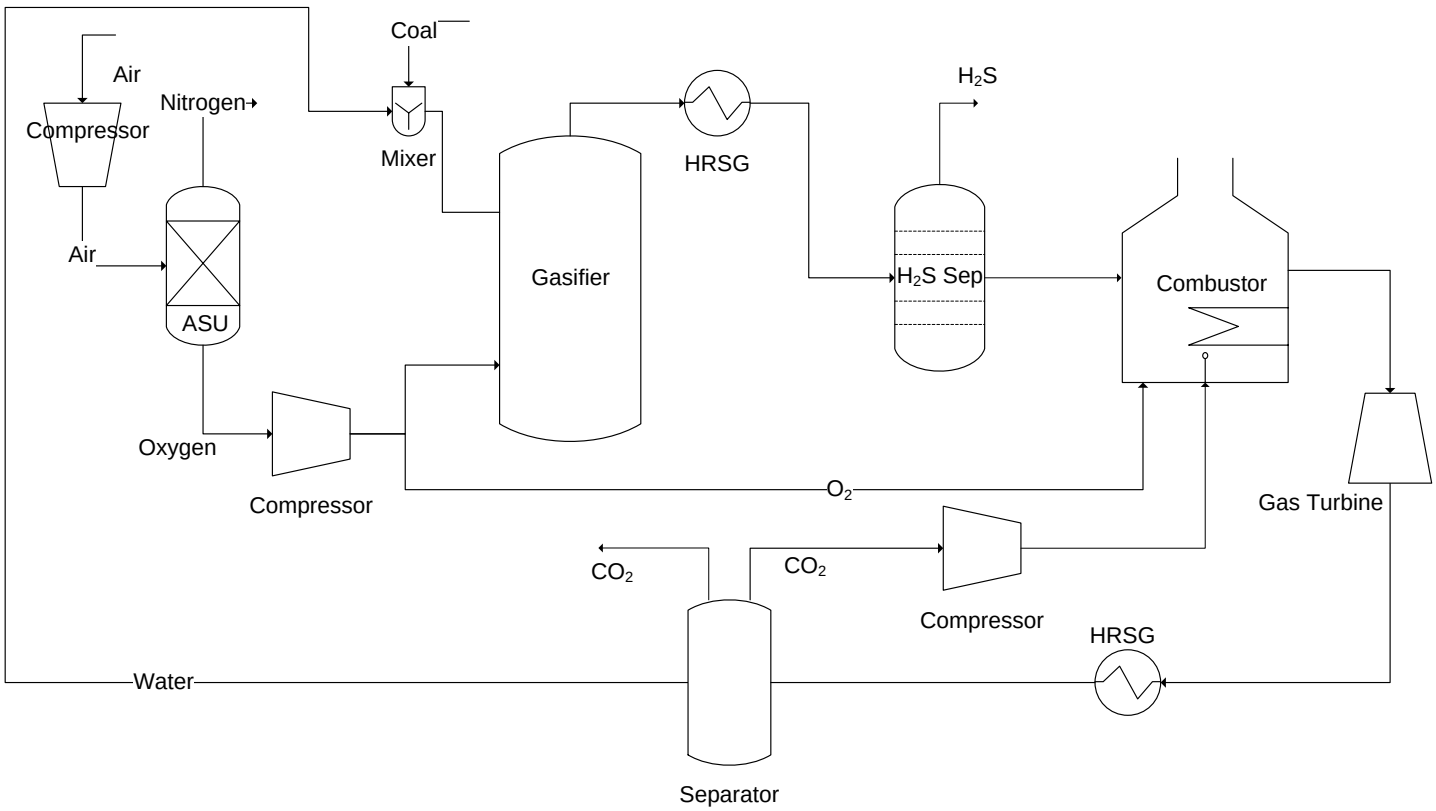


*Figure 15: IGCC design without WGS reactor (Combustion oxidant: $O_2$, Combustor temp control: $CO_2$)*

# Chapter 4. Results and Discussions

## 4.1 Net Power Generation and Efficiency Comparison

This section compares the results of net electricity generation and efficiencies for all case studies. All the results have been calculated with 90% of $CO_2$ capture with transport pressure of 80 bar. The net power generation is the net electricity generated from all steam and gas turbine cycles. It can be calculated by subtracting all auxiliary energies consumed from the gross electricity generated as shown in the below equation.

$$\eta_{net} = \frac{Gross\ power\ Output\ (MWe) - Auxiliary\ energy\ consumed(MWe)}{Feed\ stock\ LHV\ (MWth)} * 100$$

In case 1, excess air is used for both hydrogen gas combustion and controlling burner temperature. The power generated from steam cycle is 209 $MW_{el}$ whereas the power generated from gas turbine section is 398 $MW_{el}$. As excess air is used to control the combustor temperature so huge volumes of air are compressed to maintain process conditions thereby increasing compression energy. From Table 10, it can be seen that the power consumption in this process is 229 $MW_{el}$ which is the highest power consumption among all case studies. The net power generated and efficiency of this process is 378 $MW_{el}$ and 36.18% respectively. In case 2, oxygen is used for hydrogen gas combustion and recycled $CO_2$ is used for burner temperature control. Due to

less flow rate of exhaust gas through gas turbine, the power generated from gas turbine section is reduced to 303 $MW_{el}$ whereas the power generated from steam cycle is 238 $MW_{el}$. The power consumption in this case is 198 $MW_{el}$ which is the least value among all case studies. The reason for least power consumption is the least compression energy requirements for recycling $CO_2$ back to combustion chamber. The net power output and efficiency of this process is calculated as 344 $MW_{el}$ and 32.9% respectively.

The case 3 do not use WGS reactors and syngas is burned using high purity oxygen making it similar to an oxyfuel process. The power generated from the steam cycle is 259 $MW_{el}$ which is the highest value among all the case studies. Moreover in this case, syngas containing both CO and $H_2$ is burned in gas turbine thereby increasing exhaust flow rate through the gas turbine giving output power of 331 $MW_{el}$. The power consumption in this process is 202 $MW_{el}$ which is slightly higher than the 2$^{nd}$ case however it is far less than the 1$^{st}$ case. The net power generated and efficiency of this process is 388 $MW_{el}$ and 37.14% respectively.

From the results it can be observed that IGCC processes with 2$^{nd}$ case design is a least efficient process whereas 1$^{st}$ and 3$^{rd}$ case designs are highly competitive in terms of power generation with an efficiency difference of only 0.96 %. From the process flow diagrams, it can be seen that case 1 and case 2 has more unit processes along with operating catalyst so slight variation in inlet

temperature of WGS reactors can not only affect the $H_2$ generation process but also overall power plant efficiency.

*Table 10: Case studies specification and summary*

| | **Case 1** | **Case 2** | **Case 3** |
|---|---|---|---|
| | **With WGS** | **With WGS** | **Non-WGS** |
| **Gasification Agent** | $O_2$ | $O_2$ | $O_2$ |
| **Syngas ( For Combustion)** | $H_2$ | $H_2$ | $H_2 + CO$ |
| **Oxidant ( Combustion )** | Air ($N_2$+$O_2$) | $O_2$ | $O_2$ |
| **Burner Temp Control** | Excess Air | $CO_2$ | $CO_2$ |
| **Possible By-Products** | $H_2O$, $N_2$ | $H_2O$ | $H_2O$,$CO_2$ |
| **$CO_2$ Capture Percentage** | 90% | 90% | 90% |
| **$CO_2$ Transport Pressure** | 80 bar | 80 bar | 80 bar |
| **Steam Cycle Power (MW)** | 209 | 238 | 259 |
| **Gas Turbine Power(MW)** | 398 | 303 | 331 |
| **Power Consumption(MW)** | 229 | 198 | 202 |
| **Power ($MW_{el}$)** | 378 | 344 | 388 |
| **Efficiency (%)** | 36.18 | 32.98 | 37.15 |

## 4.2 Plant performance & quality control indicators

There are some important plant performance and environmental quality control indicators that are commonly used in power plant analysis. $CO_2$ specific emissions from a power plant can be calculated in terms of $CO_2$ emitted per unit MW of electricity produced as shown in the equation. From the results, it is found that the specific $CO_2$ emissions can be reduced to 0.11 t/$MW_{el}$ whereas annual $CO_2$ emissions can be reduced to 0.36 million tons respectively.

$$SE_{CO2} = \frac{Emitted\ CO_2\ flow\ rate\ (t/hr)}{Net\ Power\ Output\ (\ MW_{el})} \tag{9}$$

Another important plant performance indicator includes variation in power plant efficiency and net power generation with $CO_2$ capture rate. Sensitivity analysis have been performed in order to analyze the impact of $CO_2$ capture percentage (60-90%) on the net power generation and plant's efficiency. Figure 16 presents the variation in plant efficiency with $CO_2$ capture percentage. All the case studies showed same trend of decrease in efficiency with percentage increase in $CO_2$ capture. From results it can be seen that net efficiency for 1st case can be increased up to 37.28% if the capture rate is reduced to 60%. For the 2nd case, plant efficiency can be increased up to 34.25% with 60% carbon capture. However efficiency can be increased up to 38.23% in 3rd case if 60% of $CO_2$ is captured. Moreover it can be seen that 3rd case has

the highest efficiency and power output for different percentages of $CO_2$ capture whereas 2nd case proved to be the least efficient process.

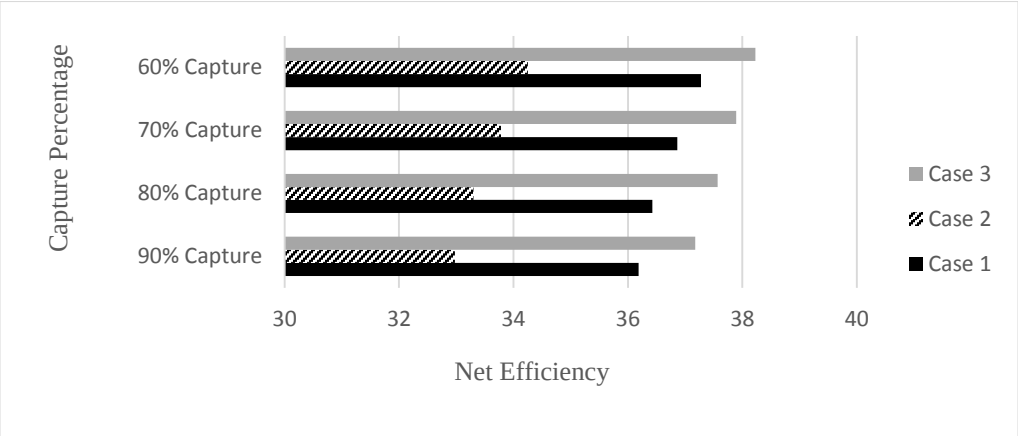


*Figure 16: Effect of $CO_2$ capture percentage on net power plant efficiency*

## 4.3 Effect of coal water slurry ratio on power plant performance

Sensitivity analysis has been performed to observe the variation in efficiency and net power output of power plant for different coal water slurry ratio's. It is observed that increasing coal water slurry ratio to 80:20 (80% coal and 20% water) increases both heating value and overall efficiency of the process. Heating value of the syngas is associated with cold gas efficiency as shown in the Equation 10. During gasification process, increasing coal water slurry ratio will increase the $H_2$ and CO content in the syngas thereby increasing heating value of syngas.

$$\eta_{CG} = \frac{LHV_{gas} * V_{gas}}{LHV_{fuel} * m_{fuel}} * 100(\%) \tag{10}$$

Figure 17 shows the variation in heating value and power plant efficiency for all the case studies with 70% and 80% coal water slurry ratios. As the heating value of the syngas is increased, the corresponding steam cycle efficiency is increased. Moreover increasing coal water slurry ratio tends to reduce the oxygen consumption during gasification process thereby increasing net efficiency of the process. From the analysis it is observed that higher coal water slurry ratio increases the net power output of the power plant however it has serious implications on pumping section. Increasing coal water slurry tends to increase wear and tear of the pumps that lead towards higher operational and

maintenance costs. Therefore it is preferred to keep coal water slurry ratio low to avoid frequent tripping of power plant.

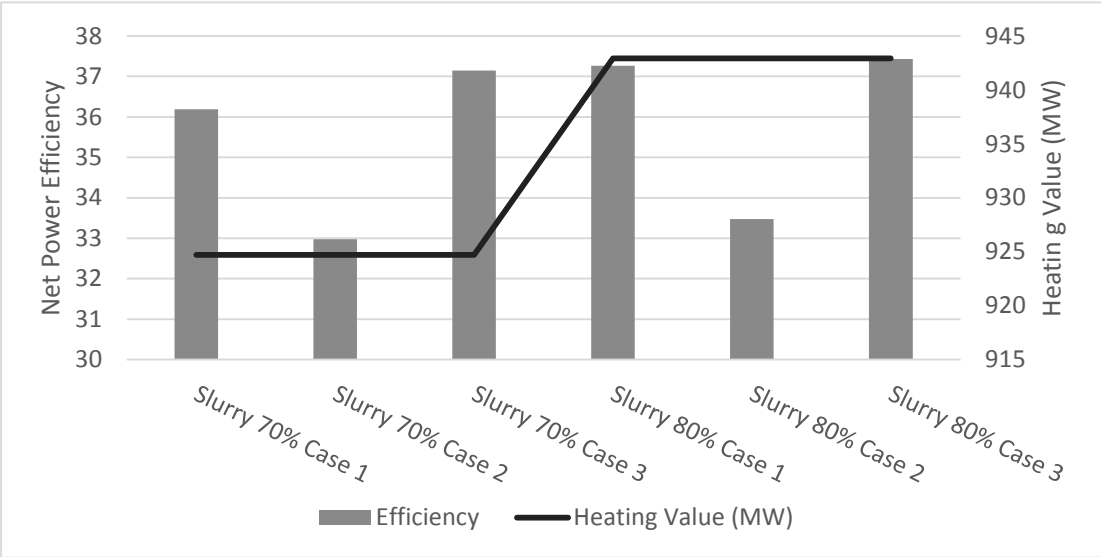


Figure 17: Effect of slurry ratio on heating value of syngas and power plant efficiency

## 4.4 Economic Evaluation

Economic evaluation is performed to estimate the total expenditure required for building an IGCC power plant with $CO_2$ capture. The capital and operating cost of all the case studies have been calculated on the basis of stream flow rates associated with a particular case study. Total investment required for an IGCC power plant is divided into two sections namely onsite investment costs and off-site investment costs. Onsite investment includes the cost of equipment, installation cost, piping and valves, civil structures, engineering and consultation fee. Whereas the off-site costs include road network, workshops, offices, storage facilities and medical services. Utility cost which is approximately 20-40% of the total capital cost, land cost and the contingency costs has also been estimated. To keep the economic analysis consistent for all case studies, offsite cost, land cost and consistency costs are taken as 25%, 15% and 5% of the total installed cost respectively. Capital cost of the plant is a function of equipment size, material of construction and operating conditions. By sizing all equipments and specifying flowrates of each stream, capital cost of all mentioned cases has been estimated. Capital cost of equipments are often expressed in terms of power law of capacity as mentioned in Equation (11) where $C_E$ –equipment cost with capacity Q and cost index $I_E$; $C_B$ – base case cost of equipment with capacity $Q_B$ and cost index $I_B$; M – constant value ranging from 0.48 to 0.87 however average value of 0.6 is mostly used [30].

$$C_E = C_B \times \left(\frac{Q}{Q_B}\right)^M \times \frac{I_E}{I_B} \quad (11)$$

For estimating capital cost of the equipment required for IGCC power plant with carbon capture, power plant has been further sub-divided into various sub sections namely solid handling facilities, gasification island, air separation unit (ASU), acid gas removal section (AGR), $CO_2$ processing and drying, Sulfur removal section and power island ( steam and gas turbine) [31]. Table 11 shows the capital cost (CAPEX) calculated for all case studies in terms of total installed cost and total investment cost. Capital cost of case 1, case 2 and case 3 is calculated as 1106.43, 1191.88 and 1021.68 million €'s respectively. Case 2 has the highest capital cost whereas the case 3 has the least capital cost. While comparing the capital cost of case 1 (base case) with case 3 design, 7.7% cost reduction can be achieved.

*Table 11: Capital Cost Estimation*

| **Plant Sub-System** | **Units** | **Case 1 (MM Euro)** | **Case 2 (MM Euro)** | **Case 3 (MM Euro)** |
|---|---|---|---|---|
| Solid Handling Facility | tonne of coal/hr | 39.18 | 39.18 | 39.18 |
| Gasification Island | tonne of coal/hr | 157.34 | 157.34 | 157.34 |
| Syngas processing Unit | tonne of coal/hr | 38.99 | 38.99 | 0.00 |
| Acid Gas Removal Unit | tonne of $CO_2$/hr | 86.29 | 86.29 | 0.00 |
| Air Separation Unit | tonne of $O_2$/hr | 79.35 | 153.75 | 154.87 |
| $CO_2$ Processing And Drying | tonne of $CO_2$/hr | 24.86 | 24.86 | 24.56 |
| Sulfur Removal Unit | tonne of Sulfur/hr | 44.67 | 44.67 | 44.67 |
| Power Island | $MW_{el}$ | 266.92 | 249.50 | 260.49 |
| Offsite Unit and Utilities | Equipment Cost (25%) | 184.40 | 198.65 | 170.28 |
| **Total Installed Cost** | **MM Euros** | **922.02** | **993.24** | **851.40** |
| Contingency | Installed Cost (15%) | 138.30 | 148.99 | 127.71 |
| Land Cost | Installed Cost (5%) | 46.10 | 49.66 | 42.57 |
| **Total Investment Cost** | **MM Euros** | **1106.43** | **1191.88** | **1021.68** |

Furthermore some economic indicators have been used to calculate the gross and net investment indexes as shown in Equation (12) and Equation (13) respectively. The gross power output and the net power output are important indicators for calculating total investment required per unit of electrical energy output (TIC/$MW_{el}$).

$$\text{Total Investment Cost } MW_{el} \text{ (Gross)} = \frac{Total\ Invesment\ Cost}{Gross\ Power\ Output} \quad (12)$$

$$\text{Total Investment Cost } MW_{el} \text{ (Net)} = \frac{Total\ Invesment\ Cost}{Net\ Power\ Output} \quad (13)$$

*Table 12: Specific Investment Cost*

| ***Power Plant Data*** | ***Units*** | ***Case1*** | ***Case 2*** | ***Case 3*** |
|---|---|---|---|---|
| Gross Power Production | MWel (gross) | 615.5 | 550.6 | 591.8 |
| Net Power Production | MWel (net) | 377.79 | 344.29 | 387.83 |
| Total Cost per MWel (gross) | MM Euro/MWel | 1.79 | 2.16 | 1.72 |
| Total Cost per MWel (net) | MM Euro/MWel | 2.93 | 3.46 | 2.63 |

Table 12 shows the comparison between CAPEX required per unit (MW) of electricity generated on gross and net power output basis for all case studies. The CAPEX required per unit $MW_{el}$ for case 1, case 2 and case 3 is calculated as 2.93 M€, 3.46 M€ and 2.78 M€ respectively.

Operational and maintenance (O&M) cost is also an important economic indicator that represents fixed and variable overheads of the plant. O&M cost of plant varies according to the complexity and frequent failures of rotating equipment in power plants. It is calculated in terms of actual working hours of the plant throughout the year. For calculating operational and maintenance cost, some economic assumptions are taken into account as shown in Table 13. Maintenance cost is taken as 3.5% of the total installed cost of the equipment whereas management cost is taken as 30% of the total labor cost.

*Table 13: Basic economic assumptions*

| | |
|---|---|
| Coal Price | 44 $/t = 0.038 €/Kg |
| Cooling Water price | 0.01 €/t |
| Boiler Feed Water ( 5 % recharge ) | 0.40 $/m3 = 0.33€/m3 |
| Selexol Price ( 4 months replacements ) | 6500 €/t |
| WGS reactor ( Catalyst ) | 1.5 x $10^6$ € annual |
| Waste Disposal | 10 €/t |
| Plant Life | 25 Years |
| Maintenance | 3.5% of OPEX |
| Administration | 30% Labor Cost |
| Labor Cost ( 120 person ) | 50,000 €/ Person |

O&M costs are sub divided into two categories i.e. fixed and variable O&M. Fixed O&M includes maintenance, labor and administration costs. Whereas variable O&M includes cost of coal, make up water for boilers, solvents, catalyst recharging and waste disposal. Fixed and variable O&M cost for all case studies have been calculated and shown in Table 14. It can be seen

that O&M cost for case 1, case 2 and case 3 is calculated as 92.83, 95.33 and 88.59 million €/year respectively. While comparing the O&M cost of case 1 (base case) with other two case studies, 4.56% cost reduction can be achieved by using case 3 design however cost increment of 2.6% is observed if case 2 design is used. Moreover O&M cost of all the case studies has been also calculated in terms of per unit $MW_{el}$ of electricity generated. O&M cost required per unit (MW) of electricity generated for case 1, case 2 and case 3 is calculated as 0.2457, 0.2659 and 0.2311 million € respectively.

*Table 14: Operational and Maintenance Cost*

| **O&M cost** | **Units** | **Case 1** | **Case 2** | **Case 3** |
|---|---|---|---|---|
| **Fixed O&M cost** | | | | |
| Maintenance Cost | M€/year | 32.27 | 34.76 | 31.50 |
| Labor Cost | M€/year | 6.00 | 6.00 | 6.00 |
| Administrative, support & overhead cost | M€/year | 1.80 | 1.80 | 1.80 |
| Total Fixed O&M cost | M€/year | 40.07 | 42.56 | 39.30 |
| Total Fixed O&M Cost ( Net $MW_{el}$ ) | M€/$MW_{el}$ | 0.1060 | 0.1126 | 0.1040 |
| **Variable O&M cost** | | | | |
| Coal | M€/year | 48.41 | 48.41 | 48.41 |
| Boiler Feed Water (BFW) | M€/year | 0.099 | 0.114 | 0.126 |
| Solvent (Selexol) | M€/year | 2.64 | 2.64 | 0.64 |
| WGS Catalyst | M€/year | 1.5 | 1.5 | 0.00 |
| Waste Disposal | M€/year | 0.11 | 0.11 | 0.11 |
| Total variable O&M Cost | M€/year | 52.76 | 52.77 | 49.29 |
| Total variable O&M Cost ( Net $MW_{el}$ ) | M€/$MW_{el}$ | 0.1397 | 0.1533 | 0.1271 |
| **Total Fixed and Variable Cost** | **M€/year** | **92.83** | **95.33** | **88.59** |
| **Total Fixed and Variable Cost (Net $MW_{el}$)** | **M€/$MW_{el}$** | **0.2457** | **0.2659** | **0.2311** |

Life time cost of the project is calculated by accounting both CAPEX and OPEX obtained from all case studies. In all case studies, life time of the power plant is assumed to be 25 years and the corresponding CAPEX and OPEX are shown in Table 15. Life time CAPEX and OPEX of case 1, case 2 and case 3 has been calculated as 3427.18, 3575.13 and 3236.43 million €'s respectively. The results obtained from all economic indicators shows that the 3rd case design requires the least investment during life time of the project.

Table 15: Life time CAPEX and OPEX

| | **Units** | **Case 1** | **Case 2** | **Case 3** |
|---|---|---|---|---|
| Project Life | Years | 25 | 25 | 25 |
| CAPEX | MM € | 1106.43 | 1191.88 | 1021.68 |
| O&M Cost | MM € | 2320.75 | 2383.25 | 2214.75 |
| **Total** | **MM €** | **3427.18** | **3575.13** | **3236.43** |

# Chapter 5. Conclusions and Recommendations

IGCC power plants has been studied over decades yet this technology has not been implemented on commercial scale because of its higher capital and operating cost as compared to post combustion power plants. However IGCC power plants are more energy efficient if carbon capture and storage (CCS) technology is implemented on a large scale. Therefore three case studies have been developed in order to investigate the IGCC power plant's performance and economics with CCS technology. An entrained flow gasification technique has been used in all case studies and the results are tuned to capture 90% of $CO_2$ where the final pressure is raised to a transport pressure of 80 bar. IGCC power plants has a potential to reduce the $CO_2$ emissions up to 0.11 ton per MW of electricity generated. Case 1 and case 2 were based on WGS reactors whereas the case 3 didn't include WGS reactor. Moreover case 1 and case 2 contains $CO_2$ capturing unit whereas 3$^{rd}$ case design allows to separate $CO_2$ while condensing steam. Some plant performance and economic indicators have been used to insure fair evaluation of analysis. The electrical power output and efficiency of case 1, case 2 and case 3 is calculated as 378$MW_{el}$, 344$MW_{el}$, 388$MW_{el}$ and 36.18%, 32.98%, 37.15% respectively. Moreover sensitivity analysis has been performed to check the effect of coal water slurry ratio and $CO_2$ capture percentage on the net power output and efficiency of the process. Total OPEX and CAPEX is also calculated in terms of per unit ($MW_{el}$) of

electricity generated for all the case studies. Net CAPEX and OPEX required per unit ($MW_{el}$) of electricity generated for case 1, case 2 and case 3 is calculated as (2.93, 3.46, 2.63) and (0.2457, 0.2659, 0.2311) million Euro's respectively.

Comparing all the case studies and results obtained from the simulations, case 1 and case 3 are found to be highly competitive options in terms of power generation and efficiency whereas case 2 is found to be the least efficient process. Moreover while doing economic analysis, it is found that using case 3 design, CAPEX can be reduced up to 7. 7% while OPEX/year can be reduced up to 4.56% as compared to case 1 design which is a conventional IGCC process.

# APPENDIX

# Gasification Model

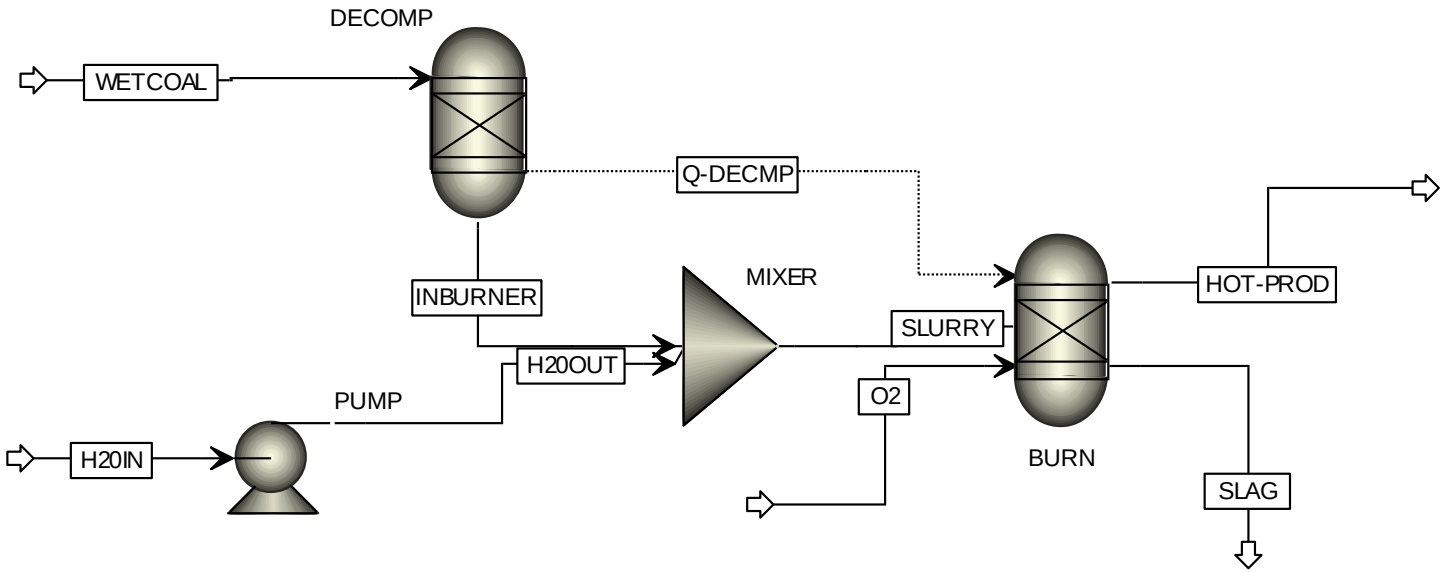

# Heat Recovery Steam Generation (HRSG)

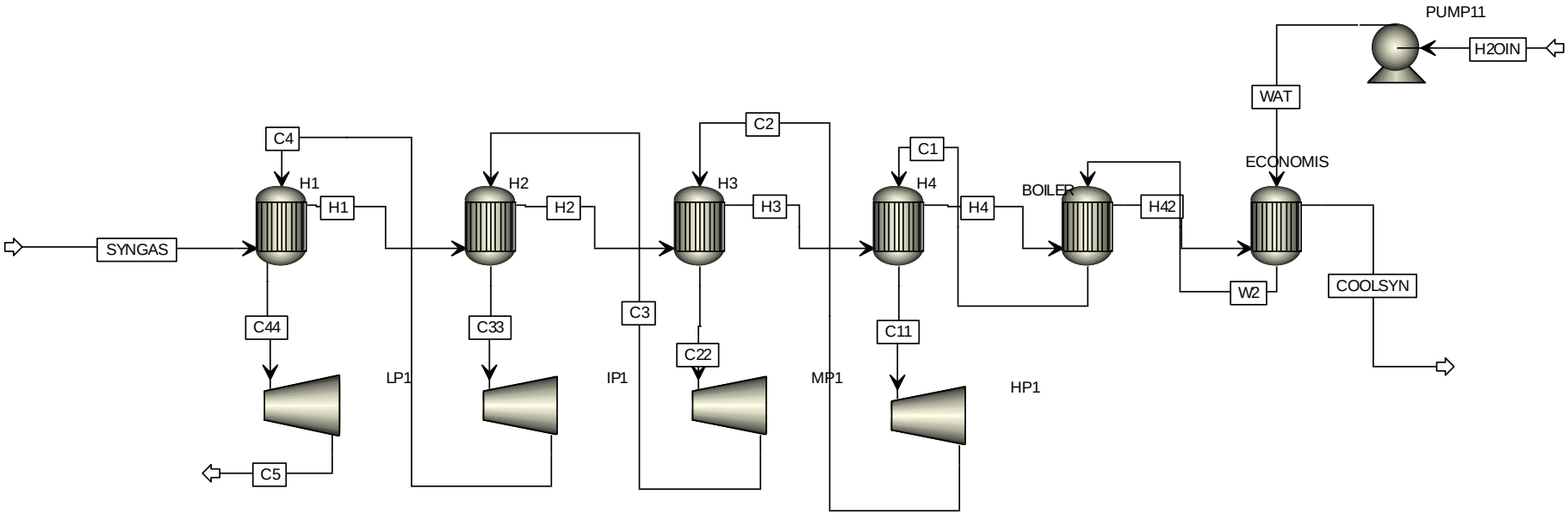

# Water Gas Shift Conversion

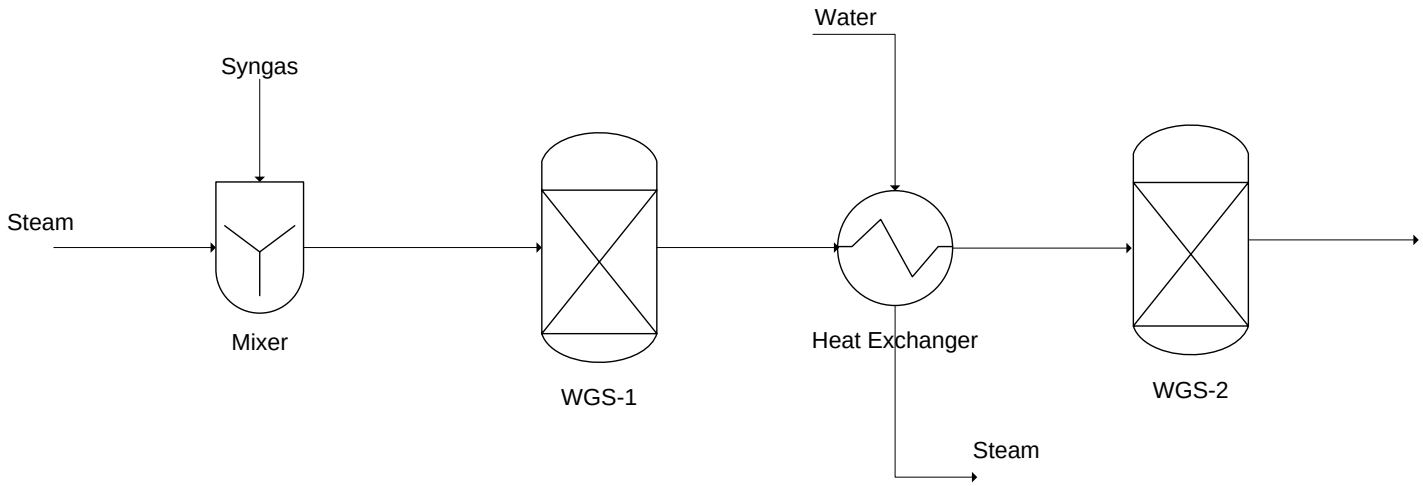

# $H_2S$ Removal (Selexol Process)

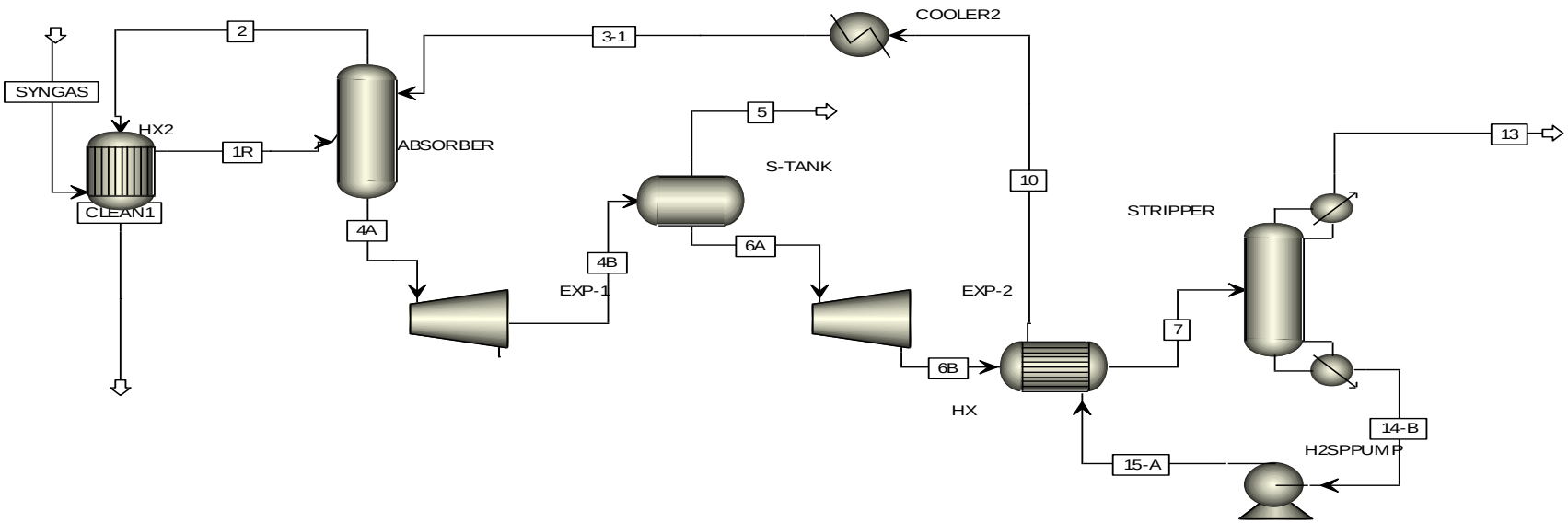

# $CO_2$ Removal (Selexol Process)

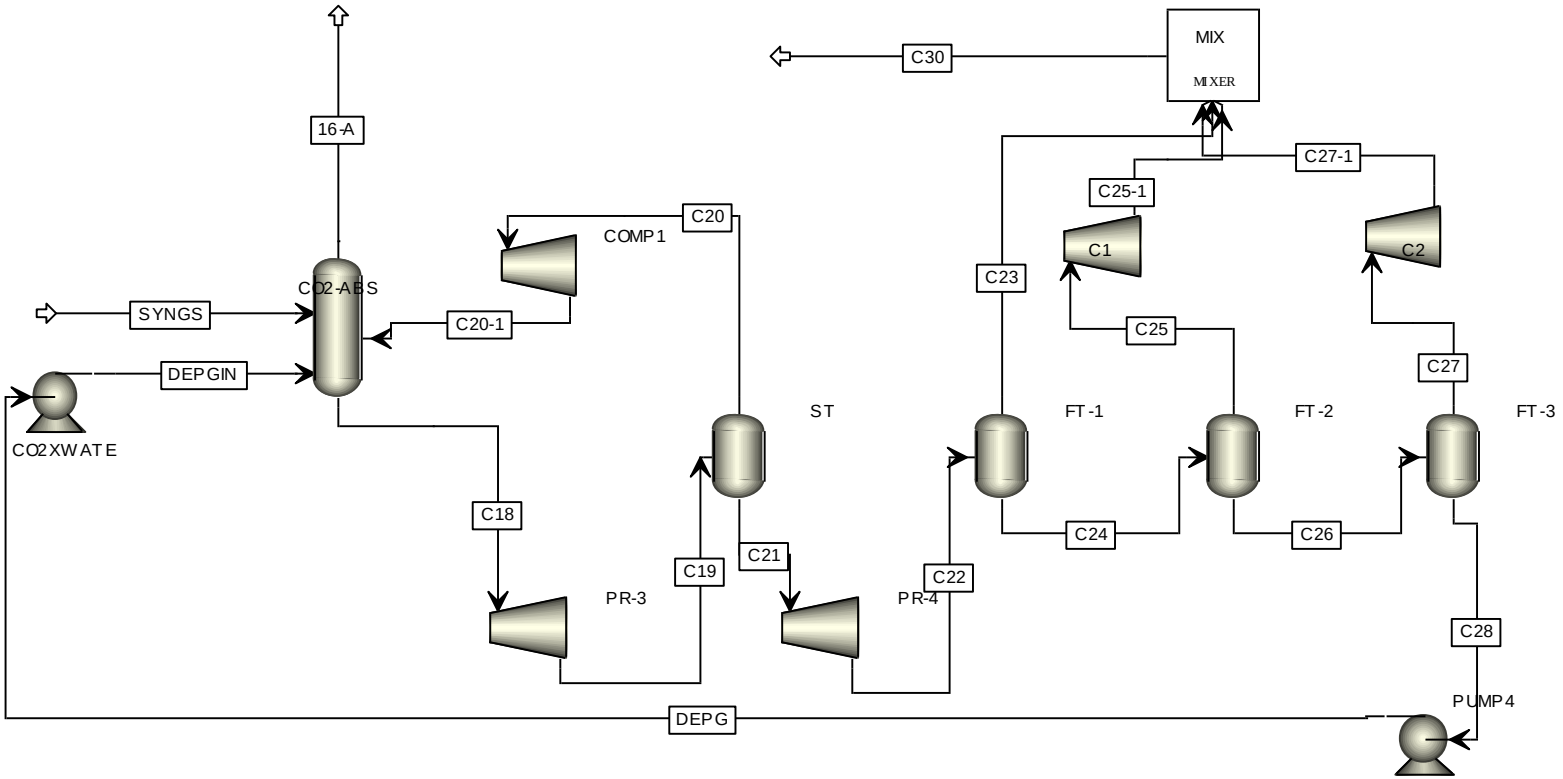

## Combustion and Gas Turbine Cycle

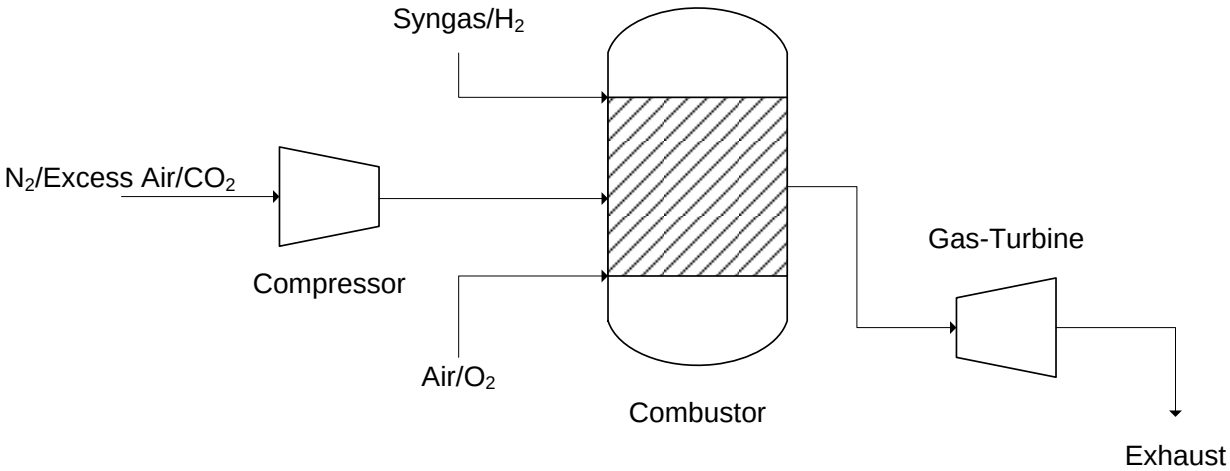

# References


[1] Intergovernmental Panel on Climate Change (IPCC), "Mitigation of Climate Change," Cambridge University Press, New York, 2014.

[2] International Energy Agency (IEA), "World Energy Outlook," Paris, 2011.

[3] International Energy Agency (IEA), "World Energy Investment Outlook," France, 2014.

[4] K. Rousaki and G. Couch, "Advanced Clean Coal Technologies and Low Value Coals," IEA Clean Coal Center, United Kingdom, 2000.

[5] C. Higman and M. V. Burgt, Gasification, USA: Gulf Professional, 2008.

[6] K. S. Ng, N. Zhang and J. Sadhukhan, "Techno-economic analysis of polygeneration systems with carbon capture and storage and CO2 reuse," *Chemical Engineering Journal,* vol. 219, pp. 96-108, 2013.

[7] A. M. Cormos, C. Dinca and C.-C. Cormos, "Multi-fuel multi-product operation of IGCC power plants with carbon capture and storage (CCS)," *Applied Thermal Engineering,* vol. 74, pp. 20-27, 2014.

[8] C. C. Cormos, F. Starr and E. Tzimas, "Use of lower grade coals in IGCC plants with carbon capture for the co-production of hydrogen and electricity," *International Journal of hydrogen energy,* vol. 35, no. 2, pp. 556-567, 2010.

[9] M. P. Fortes, A.D. Bojarski, E. Velo, J.M. Nougues and L. Puigjaner, "Conceptual model and evaluation of generated power and emissions in an IGCC plant," *Energy,* vol. 34, no. 10, pp. 1721-1732, 2009.

[10] C. C. Cormos, F. Starr and E. Tzimas, "Use of lower grade coals in IGCC plants with carbon capture for the co-production of hydrogen and electricity," *International Journal Of Hydrogen Energy,* vol. 35, no. 2, pp. 556-567, 2010.

[11] J. Urech, L. Tock, T. Harkin, A. Hoadley and F. Maréchal, "An assessment of different solvent-based capture technologies within an IGCC-CCS power plant," *Energy,* vol. 64, pp. 268-276, 2013.

[12] A. Padurean, C. C. Cormos and P. S. Agachi, "Pre-combustion carbon dioxide capture by gas–liquid absorption for Integrated Gasification Combined Cycle power plants," *International Journal of Greenhouse Gas Control,* vol. 7, pp. 1-11, 2012.

[13] M. Kawabata, O. Kurata, N. Iki and A. Tsutsumi, "System modeling of exergy recuperated IGCC system with pre- and post-combustion CO2 capture," *Applied Thermal Engineering,* vol. 54, no. 1, pp. 310-318, 2013.

[14] S. Ferguson, G. Skinner, J. Schieke, K. C. Lee and E. V. Dorst, "High efficiency integrated gasification combine cycle with carbon capture via technology advancements and improved heat integration," *Energy Procedia,* vol. 37, pp. 2245-2255, 2013.

[15] J. D. Figueroa, T. Fout, S. Plasynski, H. McIlvried and R. D. Srivastava, "Advances in CO2 capture technology—The U.S. Department of Energy's Carbon Sequestration Program," *International journal of green house gas control,* pp. 9-20, 2008.

[16] P. Folger, "Carbon Capture: A Technology Assessment," Congressional Research Service, 2013.

[17] Department of Energy (DOE), "Power Plant Water Usage and Loss Study," National Energy Technology Laboratory (NETL), USA, 2005.

[18] C. Higman and S. Tam, "Advances in Coal Gasification, Hydrogenation and Gas Treating for the Production of Chemicals and Fuels," *Chemical Reviews,* vol. 114, no. 3, pp. 1673-1708, 2014.

[19] "Gasification Technologies Council," [Online]. Available: http://www.gasification.org/. [Accessed 18 March 2015].

[20] A. M. Cormos, C. Dinca and C. C. Cormos, "Multi-fuel multi product operation of IGCC power plant with carbon capture and storage (CCS)," *Applied thermal engineering,* vol. 74, no. 5, pp. 20-27, 2015.

[21] "World Energy Council," [Online]. Available: www.worldenergy.org. [Accessed 18 March 2015].

[22] M. P. Fortes, A. D. Bojarski, E. Velo, J. M. Nougues and L. Puigjaner, "Conceptual model and evaluation of generated power and emissions in an IGCC plant," *Energy,* vol. 34, no. 10, pp. 1721-1732, 2009.

[23] C. Higman and M. V. D. Burgt, Gasification 2nd edition, USA: Gulf professional publishers, 2008.

[24] D. Jones, D. Bhattacharyya, R. Turton and S. E. Zitney, "Optimal design and integration of an air separation unit (ASU) for an integrated gasification combined cycle (IGCC) power plant with CO2 capture," *Fuel processing technology,* vol. 92, no. 9, pp. 1685-1695, 2011.

[25] Department of Energy (DOE), "Cost and performance baseline for fossil energy plants," NETL, 2007.

[26] B. Metz, O. Davidson, H. d. Conincck, M. Loos and L. Meyer, "Carbon capture and storage," Cambridge university press, New York, 2005.

[27] GE Power Systems, "Specification for Fuel Gases for Combustion in Heavy-Duty Gas Turbines," General Electric Company, New York, 2002.

[28] G. P. Systems, "IGCC gas turbines for refinery applications," New York, 2003.

[29] S. Mukherjee, P. Kumar, A. Hosseini, A. Yang and P. Fennell, "A Comparative Assessment of IGCC PlantsWith Various CO2 Capture Technologies Producing Electricity And Hydrogen," *Energy & Fuels,* vol. 28, no. 2, pp. 1028-1040, 2014.

[30] W. D. Seider, J. Seader, D. R. Lewin and S. Widagdo, Product and Process Design Principles ( Synthesis, Analysis and Evaluation), 3rd Edition, John Wiley & Sons (Asia) Pte Ltd, 2010.

[31] C. C. Cormos, "Integrated assessment of IGCC power generation technology with carbon capture and storage (CCS)," *Energy,* vol. 42, no. 1, pp. 434-445, 2012.

[32] M. M. Majoumerd, H. Raas, S. De and M. Assadi, "Estimation of Performance Variation of Future Generation IGCC with Coal Quality And Gasification Process- Simulation Results of EU H2-IGCC Project," *Applied Energy,* vol. 113, pp. 452-462, 2014.