공학박사 학위논문

# Evaluation of Concrete Bridges Based on Decommissioned Bridge Tests

## 폐교량 실험에 근거한 콘크리트교의 안전진단 방법 제안

**2022 년 2 월**

서울대학교 대학원

건설환경공학부

이 주 형

# Evaluation of Concrete Bridges Based on Decommissioned Bridge Tests

지도 교수 조 재 열

이 논문을 공학박사 학위논문으로 제출함

**2022 년 2 월**


서울대학교 대학원

건설환경공학부

이 주 형


이주형의 공학박사 학위논문을 인준함

**2021 년 12 월**

위 원 장 _____ (인)

부위원장 _____ (인)

위 원 _____ (인)

위 원 _____ (인)

위 원 _____ (인)

# Abstract

## Evaluation of Concrete Bridges Based on Decommissioned Bridge Tests

Joo-Hyung Lee

Department of Civil and Environmental Engineering

The Graduate School

Seoul National University

The performance of the bridge changes over time after its construction. Due to this aging, the serviceability and durability of the bridge would deteriorate, and if the performance degradation is severe, even collapse accidents could occur. Therefore, the current performance of the existing bridges has been evaluated through regular bridge evaluation.

The evaluation of concrete bridges in Korea consists of various methods, such as visual inspection, non-destructive testing, material testing, structural analysis, and loading test. However, since these methods indirectly evaluate the performance of the aged bridges, the actual performance could not be accurately investigated.

This study started to verify how the current bridge evaluation for concrete bridges in Korea could evaluate the actual performance of the existing bridges. To this end, first, the level of the current evaluation guideline was compared with that of foreign countries, and the actual bridge evaluation cases were analyzed to figure out how the evaluation was performed. Then, the actual material strength and

member flexural strength were experimentally evaluated by conducting tests the in laboratory on the specimens obtained after the demolition of the concrete bridges after several decades of the service year.

A result of comparing domestic and foreign bridge evaluation guidelines and analyzing the bridge evaluation cases confirmed that although Korea regularly performs various evaluation methods compared to other countries, the current methods are not efficient. After performing material and structural tests, the material strength of the specimens was above the design strength. Moreover, the actual flexural strength of the specimen was higher than the nominal strength calculated by material design strength.

Based on the research results, an efficient bridge evaluation process was proposed. In the essential evaluation regularly, only the condition inspection (visual inspection and rebound test) is performed. Through this inspection, the current condition and changes of the bridge are investigated and tracked. If severe damage or deterioration is investigated in the regular inspection, additional NDT and material tests are performed to determine the extent and cause of the defects. Then, if structural performance degradation is suspected, safety assessment reflecting the bridge's current condition is performed. As the proportion of old bridges is gradually increasing, the proposed evaluation process could be helpful to conduct an efficient bridge evaluation.

**Keyword :** bridge evaluation, condition inspection, safety assessment, decommissioned bridge tests

**Student Number :** 2015-21304

# Table of Contents

# List of Tables

# List of Figures

# 1. Introduction

## 1.1 Study Background

Bridge construction in Korea began in earnest from the 1970s and 1980s. According to the report by the Ministry of Land, Infrastructure and Transport, hereinafter called the MOLIT, in 2020, the proportion of bridges with a service life of 30 years or more in only 15% of the total bridges as of 2019. However, in 2030, the proportion will increase to 39%. In particular, in the case of concrete bridges which account for more than 80% of whole bridges, the proportion of bridges with a service life of 30 years or more would reach 44% by 2030 as shown in Figure 1.1, and the proportion of the old bridges is gradually increasing.

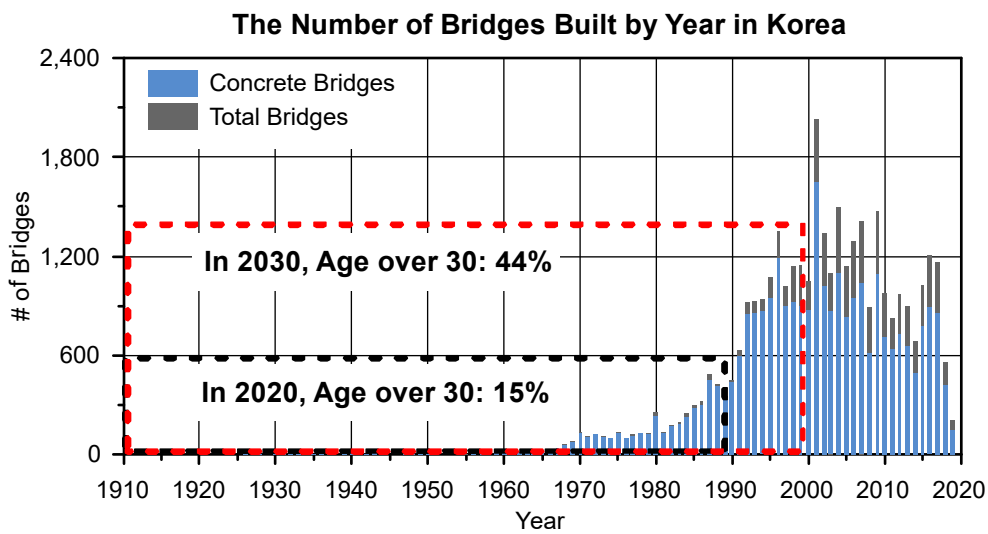


**Figure 1.1 Bridge construction quantity by year in Korea**

As the bridge aging progresses, problems caused by aging are also increasing. As a representative example, the fracture of the prestressing tendons was found in the Jeongleungcheon overpass (PSC box girder, 1998) located in Seoul in 2016, and it was completely stopped for almost one month from February 22 to March 18 to identify the cause and perform emergency repair and strengthening work.

Bridge construction begun in earnest in the United States in the 1920s and 1930s, which was more than 50 years ahead of Korea. In particular, the construction increased rapidly after World War II. Therefore, according to the report published in 2010 by American Society of Civil Engineers, hereinafter called ASCE, the aging of bridges located in the US and the deterioration of their performance is serious as shown in Figure 1.2. Over 42% of the total bridges (about 617,000) exceeded 50 years of service life. Due to such deterioration, 503 bride collapse accidents happened between 1989 and 2000, and bridge safety issue was considerably serious. Thus, in 2012, the Obama administration ratified the bill (MAP-21), which mandated active budget investment and maintenance of aging infrastructure facilities. However, there are many bridges still in poor condition, and it is estimated that an astronomical cost of $125 billion (about 150 trillion won) is required to repair and strengthen the total bridges in the United States.

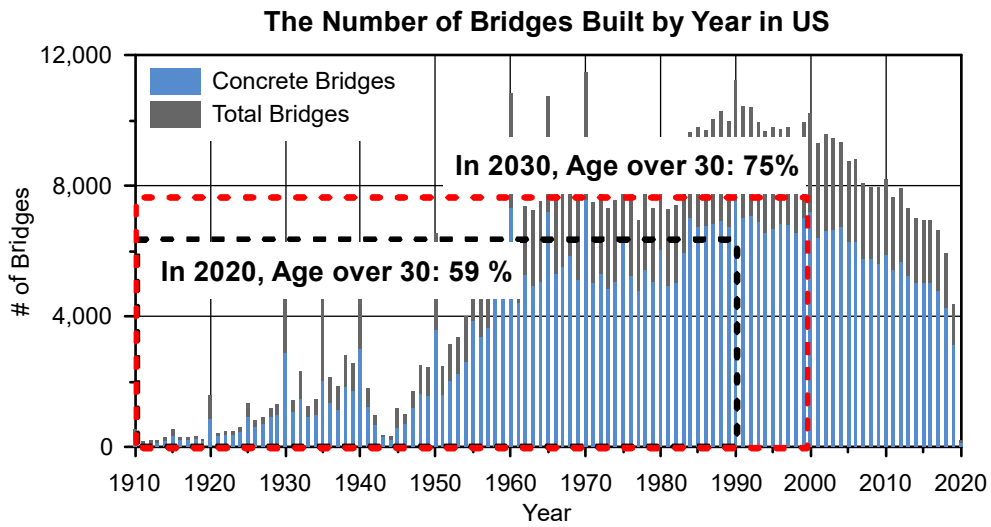


**Figure 1.2 Bridge construction quantity by year in US**

Also in the case of Japan, by 2023, the Japanese government predicted that the proportion of bridges with a service life 50 years or more would reach 43% and bridge aging is significant (MLIT 2013). 75% of total bridges in Japan had been managed by local authorities, and 80% of the bridge evaluation guidelines of the authorities only stipulated simple visual inspection. In the end, the number of bridges where passage restrictions were enforced due to concerns about safety issue was increasing from 977 in 2008 to 2,104 in 2013, more than doubling in 5 years. In order to strengthen the maintenance system of the existing bridges, the Ministry of Land, Infrastructure, Transport and Tourism, hereinafter called MLIT, published a new bridge evaluation guideline in 2014, requiring regular bridge inspection. As can be seen in the case of the US and Japan, if the maintenance of in-service bridge is not performed in a timely manner, not only it will cost a huge maintenance expense in the future, but also the safety of users could be greatly threatened due to old bridge's deterioration.

Maintenance system of existing bridge starts with bridge evaluation that inspects the current condition and assesses the structural performance of the old bridges. Bridge evaluation in Korea began in earnest after the enactment of the 'Special Act on Safety Control of Public Structures', hereinafter called the Act, in 1995. After few disastrous large-scale structure collapse accidents such as the Seongsu Bridge in 1994 and the Sampoong department store in 1995, the Act was enacted to strengthen the maintenance system of public structures. Afterwards, evaluation of in-service bridges has been regularly performed according to the Act.

Since the enactment of the Act in 1995, evaluation of concrete bridges in service has been carried out by using various methods such as visual inspection, non-destructive tests, structural analysis, and loading tests. However, in the most cases, the bridge evaluation doesn't directly evaluate the current performance of old bridges, but rather observes and predicts them in an indirect way. Therefore, it's necessary to figure out whether the current methods in Korea accurately evaluate the performance of existing bridges as the proportion of old bridges is gradually increasing.

## 1.2 Research Scope and Methods

This study was conducted in the following ways. First, the current guidelines of domestic and foreign countries were compared and analyzed. Then, by analyzing cases of bridge evaluation on real existing bridges, it was identified how the evaluation methods is actually being performed. Through this process, the characteristics and limitations of the current evaluation methods for concrete bridges in Korea were figured out. In addition, the actual structural performance of the old concrete bridge was experimentally determined by analyzing the experimental material and structural tests performed on the members from deteriorated bridges in Korea. The actual structural performance of the concrete bridge members by the experiment was compared with the performance predicted by the current evaluation methods. Based on the literature review and the results of the tests, an effective evaluation method for in-service concrete bridges was presented.

# 2. Evaluation Methods of Concrete Bridges in Korea and Foreign Countries

## 2.1 Concrete Bridge Evaluation in Korea

### 2.1.1 Current Regulations of Bridge Evaluation

In 1995, the Act about evaluation and maintenance of infrastructure facilities was enacted and an enforcement decree and an evaluation guideline in accordance with the Act. The detailed guideline describes detailed diagnosis methods according to the type of facility and evaluation personnel perform inspection and assessment according to the guideline. After its establishment in 1995, the Act was amended to 'Special Act on the Safety Control and Maintenance of Establishments'. With the amendment of the law, small bridges which hadn't been included in maintenance system were designated as a Class-III bridge. And Performance Assessment was added to perform a comprehensive assessment of the performance of an in-service bridge. The bridge evaluation guidelines in Korea currently applied are as follows. KISTEC is the abbreviation for Korea Infrastructure Safety and Technology which was a public institution for infrastructure's maintenance. The first and second guideline are hereinafter called as the Detailed Guideline or the Guideline.

① MOLIT, KISTEC, *Detailed Guideline for Safety and Maintenance of Facilities (Safety Examination & Diagnosis)*, (2019.09)

② MOLIT, KISTEC, *Detailed Guideline for Safety and Maintenance of Facilities (Performance Assessment)*, (2019.01)

③ MOLIT, KISTEC, *Class-III Facilities Safety Grade Evaluation Manual*, (2019.01)

The type and interval of a bridge's evaluation is determined according to the corresponding bridge's class and the last safety grade as Table 2.1. And Table 2.2 shows the basic tasks performed on a regular evaluation.

**Table 2.1 Bridge evaluation types and intervals in Korea**

| Safety Grade in the last evaluation | Safety Inspection (Class-I, II, III) | Full Safety Examination (Class-I, II) | Full Safety Diagnosis (Class-I) | Performance Assessment (Class-I, II) |
|---|---|---|---|---|
| A | At least once a half year | Once every 3 years | Once every 6 years | Once every 5 years |
| B, C | at least once a half year | Once every 2 years | Once every 5 years | |
| D, E | 3 or more times a year | Once a year | Once every 4 years | |

- Class-I: Suspension, Cable-stayed, Arch, Truss, Span length of 50 m or more (Excluding single span bridges), Total length of 500 m or more
- Class-II: Single span bridges which span length of 50 m or more, Total length of 100 m or more
- Class-III: Total length of 20 ~ 100 m and 10 years after completion

**Table 2.2 Basic tasks of concrete bridge evaluation in Korea**

| | Full Safety Examination | Full Safety Diagnosis |
|---|---|---|
| 1. Condition Inspection | 1.1 Visual Inspection | 1.1 Visual Inspection |
| | 1.2 Material tests - Rebound hammer, Carbonation depth | 1.2 Material tests – Rebound hammer, Ultrasonic test, Carbonation depth, Chloride Ion, GPR, Cracking depth |
| 2. Safety Assessment | | 2.1 Safety Factor $SF = \phi M_n / M_u$ |
| | | 2.2 Load Carrying Capacity $P = RF \times K_s \times P_r$ (When $SF < 1.0$) |
| 3. Safety Grade | Condition Inspection | min(Condition Inspection, Safety Assessment) |

### 2.1.2 History of Bridge Evaluation Guidelines in Korea

Before the enactment of the Act in 1995, legislative bridge evaluation had not been performed. In the case of condition inspection, there was no standardized manual, so the inspection was performed by empirical methods or separate condition evaluation criteria from institutions such as Korea Institute of Civil Engineering and Building Technology and Korean Society of Civil Engineers, etc. (MOCT 1996). The safety assessment of existing bridges in Korea was initiated by Ministry of Construction and Transportation(MOCT)'s National Construction Laboratory from 1968 to early 1990's (KICT 2001). And MOCT published a report (1990) which describes methods about assessment of existing bridge member's load carrying capacity by applying Japanese method.

In 1996, MOCT and KISTEC published the Detailed Guideline and established criteria of condition inspection and safety assessment. However, still the most contents of structural assessment were similar to that of Japanese guideline. Through several revisions since 1996, current Detailed Guideline are being applied. The major revisions by year are shown in Table 2.3.

**Table 2.3 Major revisions of bridge evaluation guidelines in Korea**

| | Year | Evaluation methods | Revisions |
|---|---|---|---|
| 1 | 1996 (enact) | - Routine Examination: visual inspection<br>- Periodic Examination: visual inspection, rebound hammer<br>- Full Safety Diagnosis: visual inspection, NDT, material tests, load carrying capacity | - Only rating of condition inspection<br>- No rating for load carrying capacity<br>- Safety assessment by ASD and USD |
| 2 | 2000 | same as 1996 | - Adjustment factor of loading test: only response adjustment factor |
| 3 | 2003 | - Routine Examination: visual inspection<br>- Full Examination: visual inspection, rebound hammer<br>- Full Safety Diagnosis: visual inspection, NDT, material tests, safety assessment (*SF*, load carrying capacity) | - Rating of both of condition inspection and safety assessment<br>- Lower rate is the safety rating<br>- For assessment, safety factor (SF) was determined as basic method |
| 4 | 2009 | same as 2003 | - The last safety rating determines the evaluation interval |
| 5 | 2010 | same as 2003 | - |
| 6 | 2017 | same as 2003 | - |
| 7 | 2018 | - Examination and diagnosis: same as 2003<br>- Performance assessment: similar with diagnosis and some items added | - 3 performance criteria: Safety Performance, Durability Performance, Serviceability Performance<br>- Comprehensive Performance determined by summing up weighting the performance results |
| 8 | 2019 | same as 2018 | - |

First, in the case of condition inspection, the damage and deterioration criteria of bridge members were further quantified from the 2003 Detailed Guideline. In the 1996 Detailed Guideline, the criteria for condition inspection of the visual inspection were in some cases ambiguous due to the qualitative expression. Thus, the Guideline was revised in the direction of quantifying the damage and deterioration criteria of members as much as possible through the study of Oh et al. (2001). As an example, the damage criterion for PSC girder was revised to evaluate surface damage and rebar exposure area as a percentage.

And from the 2003 Guideline, concrete durability by material tests and non-destructive testing (NDT) was added as a condition inspection item. In Full Safety Examination and Full Safety Diagnosis, concrete material tests and NDT have been performed regularly as basic tasks. Carbonation depth and chloride ion content testing are to quantitatively inspect the durability of concrete. Also estimation of concrete compressive strength through NDT of rebound hammer and ultrasonic is a representative concrete condition and durability inspection method. However, the estimated compressive strength of concrete by NDT was not used for the grade of condition inspection. In the Performance Assessment newly added from 2018, the quality of concrete cover is evaluated by the compressive strength estimated by the rebound hammer test in the Durability Performance category. In the durability evaluation method, the durability performance grade is calculated by comparing the estimated concrete compressive strength with the design standard compressive strength or by comparing the non-destructive strength of the sound part/non-sound part. When comparing the design standard compressive strength and the compressive strength estimated by the rebound hardness test, if the estimated strength value is 100% or more of the design value, it is grade a, and if the strength

estimation value is between 90% and 100% of the design value, it is grade b. If it is less than 90%, grade c is evaluated. Similarly, when comparing the rebound hardness value of the healthy part and the non-sound part, if the strength value of the non-sound part is more than 95% of the sound part, it is grade a, if it is between 85% and 95% of the healthy part, it is grade b, and if it is less than 85% grade c. However, there is no explanation in the detailed guidelines on what basis the rate of strength reduction, which is the basis for rating calculation, was determined.

In the case of safety assessment, from the 2003 Detailed Guideline, safety factor (*SF*) by structural calculation was determined as the basic evaluation criterion for bridge members. In the 1996 version of the previous Guideline, the assessment method was the load carrying capacity by structure analysis and loading tests. However, the load carrying capacity has a large fluctuation range depending on the dead load to live load ratio of the member, so it was revised to assess the structural safety of the existing bridge as a *SF*.

Along with the revision of the basic concept of structural assessment, in order to reflect the assessment result when rating the safety grade of the existing bridges, the rating calculation according to the bridge evaluation result is Table 2.4 was added. If both condition inspection and safety assessment are performed, such as Full Safety Diagnosis, the lower grade is determined as the safety grade of the bridge.

**Table 2.4 Safety assessment criteria**

| Grade | Safety assessment criteria |
|---|---|
| A | - $SF > 1.0$ |
| B | - $0.9 \leq SF < 1.0$ & load carrying capacity > live load |
| C | - $0.9 \leq SF < 1.0$ |
| D | - $0.75 \leq SF < 0.9$ |
| E | - $SF < 0.75$ |

Lastly, the response adjustment factor based on the loading test was revised in 2000 and has been applied until now. In the initial version of the Detailed Guideline for bridge evaluation, the Japanese bridge load carrying capacity content was applied with necessary modifications, and the loading test correcting factor was also used as it is. However, studies had been conducted on the lack of consistency in the load carrying capacity by the test, such as the use of test operator arbitrarily without a clear understanding of the Japanese correction factor (Oh et al., 1996) (Koo et al., 2001). Therefore, the Detailed Guidelines were revised in 2000 to use only the deflection or strain measured in the static load test and the impact factor estimated in the dynamic load test as response adjustment factors.

## 2.2 Comparative Analysis of Bridge Evaluation Guidelines for Concrete Bridges in Korea and Abroad

The evaluation guidelines for existing concrete bridges currently used in Korea, USA, Canada, UK and Japan were compared and analyzed to figure out the characteristics and differences of each country's evaluation methods. In the case where there are separate bridge evaluation manuals for federal and state units, such as in the US, analysis was performed based on the manuals at the federal level. In the case of the Canadian condition inspection, only guidelines for each province exist instead of a guideline at the government level. Thus, the manual of Ontario state was selected because the state is the most populated. The comparative analysis items of the guidelines were divided into four parts: condition inspection, safety assessment, loading test and grade. For efficient analysis, uniform terminology was defined with reference to the Korean and US guidelines as Table 2.5. The types of bridge evaluation guidelines for each country used in the analysis are same as Table 2.6.

**Table 2.5 Definitions of bridge evaluation terminology**

| Terminology | Descriptions |
|---|---|
| Visual Inspection | - Acts performed to obtain basic data on existing facilities and to track changes in materials such as changes in structure's condition (defect, damage, deterioration, etc.) and crack width over time |
| Defect | - Initial fault such as crack, cold joints, etc. occurred during the construction process |
| Damage | - Cracks and spalling, etc. occur in a short time due to earthquake or collision, etc., and do not progress with the passage of time |
| Deterioration | - Durability decrease in the long term main after construction due to physical, chemical, climatic or environmental factors to material properties of the structures, and progresses over time |
| Condition Inspection | - The act of evaluating the condition of the facility, including the degree of defects, by examine the appearance of the facility |
| Safety Assessment | - The act of evaluating the structural safety of a facility based on data collected through on-site investigation and referring to design documents and the results of previous bridge evaluation reports |
| Load Testing | - A test to observe and measure the actual behavior of the existing bridge members by directly loading vehicle loads that does not affect the elastic behavior of the bridge |
| Grade | - As a result of bridge evaluation, a grade indicating the condition and structural safety of the bridge according to the comprehensive evaluation |

**Table 2.6 Existing concrete bridge's guidelines of each country**

| | Condition Inspection | Safety Assessment | Load Testing | Grade |
|---|---|---|---|---|
| Korea | - MOLIT, KISTEC, "Detailed Guideline for Safety and Maintenance of Facilities [Safety Examination & Diagnosis] (2019), [Performance Assessment]" (2019) | | | |
| USA | - AASHTO, "The Manual for Bridge Evaluation 3rd" (2018)<br>- FHWA, "Bridge Inspector's Reference Manual" (2012) | - AASHTO, "The Manual for Bridge Evaluation 3rd" (2018) | - AASHTO, "The Manual for Bridge Evaluation 3rd" (2018) | - FHWA, "Recording and Coding Guide for the Structure Inventory and Appraisal of the Nation's Bridges" (1995) |
| Canada | - Ontario Ministry of Transportation, "Ontario Structure Inspection Manual" (2008) | - CSA, "Canadian Highway Bridge Design Code S6-14" (2014) | - CSA, "Canadian Highway Bridge Design Code S6-14" (2014) | - Ontario Ministry of Transportation, "Ontario Structure Inspection Manual" (2008) |
| UK | - Highways England, "CS 450 Inspection of highway structures" (2020) | - Highways England, "CS 454 Assessment of highway bridges and structures" (2020)<br>- Highways England, "CS 455 The assessment of concrete highway bridges and structures" (2020) | - Highways England, "CS 463 Load testing for bridge assessment" (2019) | - Highways England, "CS 450 Inspection of highway structures" (2020) |
| Japan | - MLIT, "Road Bridge Periodic Inspection Procedure" (2019) | - JRA, "Specifications for Highway Bridges" (2012)<br>- JSCE, "Standard Specifications for Concrete Structures – Maintenance" (2007) | - | - MLIT, "Road Bridge Periodic Inspection Procedure" (2019) |

### 2.2.1 Condition Inspection

Condition inspection is to observe the current state of the existing bridges and track changes through visual inspection, physical inspection, non-destructive testing(NDT), durability testing and material testing. The main condition inspection methods stipulated in the domestic and foreign bridge evaluation guidelines are same as Table 2.7.

**Table 2.7 Main condition inspection methods**

| Inspection Types | Inspection Methods |
|---|---|
| Visual Inspection | ① Visual inspection |
| Physical Inspection | ②-1 Hammering, ②-2 Chain drag |
| NDT | ③-1 Rebound, ③-2 Ultrasonic testing, ③-3 GPR |
| Durability testing | ④-1 Carbonation depth<br>④-2 Chloride ion test |
| Material Testing | ⑤ Coring |

Field inspection is to investigate the deterioration and damage that occurred on the surface of the bridges through visual and physical inspection. The typical deterioration and damage on concrete bridges are cracking, delamination, spalling, patched area, exposed rebar, efflorescence, abrasion, etc. The physical test is to estimate the defects inside the member by the sound made by tapping the parts where cracking, layer separation, water leakage, and efflorescence, etc. were found during the visual inspection with a hammer or chain.

The concrete NDT evaluates the concrete condition and durability of the existing bridges by estimating the compressive strength of the surface concrete of

the members. In Korea, rebound hardness and ultrasonic velocity tests are applied as basic NDT methods. The rebound hardness method estimates the compressive strength using specific correlation equations between the rebound and compressive strength measured when hitting the concrete surface. According to the Guidelines of Korea, it has the advantage of being easy to perform, but there is a disadvantage that the internal strength can't be estimated because only the surface condition of the member can be investigated. In both Full Safety Examination and Full Safety Diagnosis, the test is regularly performed. There are various strength estimation formulas, and as result of reviewing domestic bridge evaluation reports as Table 2.8. For normal strength concrete members, the strength estimation formula of the Architectural Institute of Japan (AIJ) and the Japan Institute of Metals and Materials (JIMM) have been mainly used. And for high strength concrete members ($f_{ck} \geq 35$ MPa), the estimation formula proposed by Ministry of Science and Technology (MOST) in Korea has been mainly applied. The standard quantity of the superstructure of the bridge is to be performed at 1 or 2 locations for every 50 m of the bridge length. And the test method is to measure the rebound hardness 20 times at the location in accordance with KS F 2730 and use the average value. In the current Korean Guideline, the compressive strength estimated by the rebound was compared with the design compressive strength to evaluate the quality of the concrete, but it was not applied to rate the condition inspection grade. On the other hand, in the Performance Assessment, the rebound hardness test result is applied to the rating of the durability safety performance grade.

**Table 2.8 Main estimation equations of rebound hardness test in Korea**

| Institutions | Equations | Note |
|---|---|---|
| AIJ | $f_c = (7.3R_0 + 100) \times 0.098$ (MPa) | Normal strength concrete |
| JIMM | $f_c = -18 + 1.27R_o$ (MPa) | |
| MOST | $f_c = 1.52R_0 - 11.28$ (MPa) | High strength concrete |

Ultrasonic testing is a method of estimating the compressive strength of concrete using the fact that transmission rate of ultrasound varies depending on the concrete condition. It has been performed as a basic task in Full Safety Diagnosis and Class-I Performance Assessment. According to the Detailed Guidelines, it's possible to investigate the condition of the inside of the members, but there is a disadvantage that the test results could be greatly affected by reinforcing bars, cracks, voids, etc., due to the characteristics of the concrete material. Like the rebound test, there are various strength estimation formulas as Table 2.9. The formulas of the AIJ and JIMM have been mainly used in the written evaluation reports in Korea. The standard quantity of the superstructure of the concrete bridges is to be evaluated at two locations for every 50 m of the bridge length. And the test method is performed according to KS F 2731. Full Safety Diagnosis and Performance Assessment don't rate the condition inspection or durability safety performance grade based on the results of ultrasonic testing.

**Table 2.9 Main estimation equations of ultrasonic test in Korea**

| Institutions | Equations |
|---|---|
| AIJ | $f_c = (215V_d - 620) \times 0.098$ (MPa) |
| JIMM | $f_c = (102V_d - 117) \times 0.098$ (MPa) |

The concrete core test has the advantage of being able to measure the actual compressive strength of the bridge members. However, since the extraction of concrete cores could impair the structural safety of the bridge, only a small amount of cores could be collected from a limited location. Therefore, it's carried out only when severe deterioration is suspected.

It's practically impossible to directly evaluate the corrosion rate of rebar inside a concrete bridge in use. Therefore, by measuring the carbonation depth and chloride ion of concrete, the corrosion degree of reinforcing bars in indirectly measured. Because concrete is basically high alkalinity, a passivation film is formed on the surface of the reinforcing bar to prevent corrosion. However, when the concrete is getting carbonized (=neutralized), the passivation film surrounding rebar becomes unstable, increasing the possibility of corrosion. By applying this principle, the degree of corrosion of internal rebar could be estimated by measuring the carbonation depth of the concrete surface of concrete bridge members. The carbonation depth test is performed regularly as a basic task in both Full Safety Examination and Full Safety Diagnosis. In the case of Examination, 2 ~ 3 points or 3 ~ 6 points of carbonation depth are measured depending on the number of spans, and in the Diagnosis, the test number increases to 4 ~ 6 points or 6 ~ 9 points. The test method is to spray phenolphthalein solution while drilling the member surface according to KS F 2596. Carbonated concrete is discolored to purple by the

solution, so measure the depth at the time of discoloration. Both the Full Safety Diagnosis and Performance Assessment calculate the condition inspection and durability safety performance grade by the depth of carbonation.

And salt damage to concrete by chloride ion could cause corrosion of rebars inside the member. Therefore, the possibility of rebar's corrosion in indirectly evaluated by measuring the chloride content of the core taken from the member through the testing in the laboratory. Chloride ion testing of concrete bridge members is regularly measured in Full Safety Diagnosis and Performance Assessment in Korea. The test standard quantity is to be performed at 3 or more locations throughout the bridge (at least a time in the superstructure). The test method is performed according to KS F 2713.

Following the analysis of the condition inspection methods in Korea, the methods in the evaluation guidelines of concrete bridge in the US, Canada, UK and Japan was compared in Table 2.10. Unlike Korea, which regularly conducts concrete NDT and durability tests as well as visual and physical inspection, foreign countries only regularly conduct visual and physical inspection. Regularly conduct the inspection to observe the current state of the bridge and track its changes. It was found that the NDT and durability test were performed only when serious damage or deterioration was found during condition inspection and a detailed inspection was required. In each country's condition inspection guidelines, various investigation methods such as NDT, durability testing, and material testing are introduced, but whether or not they are performed is left to the judgement of the inspect personnel. In addition, Korea has more kinds of basic tasks performed on a regular basis than other countries, and the interval of inspection tends to be shorter than that of others. Korea and UK are the only countries where the highest level of

condition inspection, and the UK's interval reached 1.5 to 2 times that of Korea. As described above, it was found that condition inspection, which requires various methods, is being performed in Korea at a shorter interval compared to other countries.

**Table 2.10 Condition inspection methods in the countries**

| | Korea | USA | Canada | UK | Japan |
|---|---|---|---|---|---|
| Superficial Inspection | Periodic Safety Examination | - | - | Safety Inspection | - |
| | ① | | | ① | |
| | (3~6 months) | | | (Frequently) | |
| Routine Inspection | Full Safety Examination | Routine Inspection | Level 1 Inspection | General Inspection | Periodic Inspection |
| | ①, ②-1, ③-1, ④-1 | ①, ② | ①, ② | ① | ①, ②-1 |
| | (1~3 years) | (2 years) | (21~57 months) | (2 years) | (5 years) |
| Detailed Inspection | Full Safety Diagnosis | In-depth Inspection | Level 2 Inspection | Principal Inspection | Special Inspection |
| | ①, ②-1, ③, ④, ⑤* | ①, ② ③*, ④*, ⑤* | ①, ② ③*, ④*, ⑤* | ①, ② ③*, ④*, ⑤* | ①, ②-1 ③*, ④*, ⑤* |
| | (4~6 years) | (When needed) | (When needed) | (6~12 years) | (When needed) |

*) at the discretion of the inspection personnel

**) Inspection methods: ① Visual inspection, ②-1 Tapping, Hammering, ②-2 Chain drag, ③-1 Rebound hardness, ③-2 Ultrasonic testing, ③-3 GPR, ④-1 Carbonation depth, ④-2 Chloride ion, ⑤ Coring

### 2.2.2 Safety Assessment

#### 2.2.2.1 Korea Detailed Guideline (2019)

In Korea's Full Safety Diagnosis and Performance Assessment, the same Guidelines as for condition inspection (or condition safety performance) are applied to structure assessment of existing concrete bridge's member. According to the Detailed Guideline, the structural safety of the member should be assessed by reflecting the bridge's current condition, such as material strength, damage and deterioration (cracking, spalling, layer separation, etc.), corrosion, actual cross sectional area of members and location of reinforcing bars, deflection, etc.

Structural safety of the existing bridges is basically assessed by the safety factor (*SF*) calculated by applying the design concept of the bridge design code (Korean Highway Bridge Design Code 2010, hereinafter as KHBDC 2010). The SF means the ratio of design strength to the required strength of bridge member in Equation 2.1.

$$SF = \frac{\phi M_n}{M_u} \tag{2.1}$$

where, $\phi M_n$ is a member design strength, $M_u$ is a required strength

At this time, if the safety factor is between 0.9 and 1.0, the grade is determined by evaluating load carrying capacity applying the rating factor (*RF*) by structural analysis and the response adjustment factor ($K_s$) by the loading test. As in the Equation 2.2, *RF* is the value obtained by subtracting the sectional force due to dead load from the design strength of the concrete bridge member divided by the

sectional force due to live load, and it means the structural allowance for the live load.

$$RF = \frac{\phi M_n - \gamma_d M_d}{\gamma_l M_l (1+i)} \tag{2.2}$$

where, $\gamma_d$ is a dead load factor, $M_d$ is a dead load effect, $\gamma_l$ is a live load factor, $M_l$ is a live load effect, $i$ is the impact factor from KHBDC 2010

The response adjustment factor ($K_s$) by static and dynamic loading tests is calculated by Equation 2.3.

$$K_s = \frac{\delta_{analysis}}{\delta_{test}} \times \frac{1+i_{analysis}}{1+i_{test}} \quad \text{or} \quad \frac{\varepsilon_{analysis}}{\varepsilon_{test}} \times \frac{1+i_{analysis}}{1+i_{test}} \tag{2.3}$$

where, $\delta_{analysis}$ and $\varepsilon_{analysis}$ are deflection and strain value by structure analysis, respectively, and $\delta_{test}$ and $\varepsilon_{test}$ are deflection and strain value from the static loading test, respectively, $i_{analysis}$ is the impact factor from KHBDC 2010, $i_{test}$ is an impact factor measured from the static and dynamic loading tests.

When evaluating the safety factor and rating factor by structural analysis, the design strength of the existing concrete bridge member is calculated by applying the strength reduction factor to the nominal member strength in consideration of the current state of the section (material strength, section loss, etc.). In this case, the material strength of the member should be the strength value obtained by material tests such as core compression test, not nondestructive tests such as rebound

hammer and ultrasonic testing. The actual dimension of the member's cross section due to damage and deterioration could be obtained through measurement during the field investigation. According to the Detailed Guideline, the strength reduction factor is a factor that takes into account the uncertainty of material strength and the difference of the design and construction section. Instead of the reduced uncertainty, a factor that considers the degree of damage occurred in service should be applied, but it is difficult to quantitatively evaluate the degree of damage to the member cross section. Therefore, the same value as the strength reduction factor in the design code (0.85 for flexure) is used. The load effects due to dead load and live load is calculated from structure analysis by applying the load currently acting on the bridge. The load combination is same as the design load combination ($1.3D+2.15L$). In this way, when evaluation the structural safety of the existing concrete bridge's member, it could be seen that the strength reduction factor and load effects are the same as the design code. In the case of material strength applied when calculating member strength, the strength by core compression test can be applied, but it's practically limited to extract cores and perform compression tests for major structural members such as RC beams and PSC girders. Therefore, as a result of previously written bridge evaluation reports in Korea (explained in detail in Section 2.3), the member strength has been calculated by applying the design material strength in every evaluation reports. Thus, it can be seen that the current safety factor and rating factor of the existing concrete bridge members in Korea are assessed at the same level as the design standard.

#### 2.2.2.2 USA AASHTO MBE (2018)

In the United States, safety assessment is being performed based on the results of Routine Inspection, which is a condition inspection conducted regularly every two years. Structural safety of an existing bridge is evaluated by rating factor, and when load rating is necessary; there are changes in the state of the bridge (severe damage and deterioration), an increase in the applied live load, and a change in the load rating method, etc. The federal load rating guideline is The Manual for Bridge Evaluation (hereinafter referred to as MBE) published by AASHTO, and each state has their own guidelines made by referring to the contents of the MBE. The rating factor method specified in the MBE is divided into three methods: Load and Resistance Factor Rating (LRFR), Allowable Stress Rating (ASR), and Load Factor Rating (LFR).

LRFR applies the design concept of AASHTO LRFD Bridge Design Specifications published in 1994 to assess the load carrying capacity of the bridges. The live load applied when evaluating the load carrying capacity is divided into three categories: Design Load Rating, Legal Load Rating, and Permit Load Rating.

In the case of Design Load Rating, rating factor of the existing concrete bridges is calculated with the design live load (HL-93) of AASHTO LRFD. The live load factor at this time is determined according to the Inventory Level or Operating Level. In Inventory Level, the same live load factor of 1.75 ($\beta$=3.5) as that of AASHTO LRFD is applied, and in the case of Operating Level, a reduced live load factor of 1.35 ($\beta$=2.5) is applied. The reason for specifying the Operating Level in addition to the Inventory Level, which evaluates the rating factor at the

same level as the design standard, is as follows. This is because, unlike the design stage, condition inspection is performed periodically for the existing bridges, and the current state of the old bridge can be reflected through the inspection. In addition, excessive cost could be calculated if the bridge is maintained at the same level as the design, so the live load factor is reduced compared to the design live load factor. By applying the design load and Inventory Level live load factor, a bridge with a load rating of 1.0 or higher means that it has sufficient structural safety for all live loads in the United States. If a rating factor of 1.0 or higher is evaluated only at the Operating Level, structural safety is guaranteed for only AASHTO legal loads.

If the *RF* is calculated to be less than 1.0 in the Design Load Rating, the Legal Load Rating is evaluated for AASHTO or various states in the United States to determine whether the bridge should be repaired, reinforced, or posting, etc. In the case of Permit Load Rating, it is to evaluate whether a specific vehicle load is passing through a certain bridge.

**Table 2.11 USA AASHTO MBE LRFR**

<table>
<tr><th colspan="2"></th><th>Design Load Rating</th><th>Legal Load Rating</th><th>Permit Load Rating</th></tr>
<tr><td colspan="2">$RF$ Equation</td><td colspan="3">$RF = \dfrac{C - \gamma_{DC} DC - \gamma_{DW} DW \pm \gamma_p P}{\gamma_{LL}(LL + IM)}$</td></tr>
<tr><td colspan="2">Description</td><td>- Load rating based on AASHTO LRFD design code</td><td>- Load rating based on AASHTO and legal loads</td><td>- Load rating for a specific vehicle load to check whether the vehicle can pass the bridge</td></tr>
<tr><td rowspan="3">Loads</td><td>Dead Load factors</td><td colspan="3">$\gamma_{DC} = 1.25$ , $\gamma_{DW} = 1.50$</td></tr>
<tr><td>Live Load</td><td>HL-93<br>(LRFD design live load)</td><td>- AASHTO legal loads (Type 3, Type 3S2, Type 3-3)<br>- Notional Rating Load or state legal loads</td><td>Actual vehicle load</td></tr>
<tr><td>Live Load Factors</td><td>Inventory level : $\gamma_{LL} = 1.75$<br>Operating level : $\gamma_{LL} = 1.35$</td><td><table><tr><th>Traffic</th><th>$\gamma_{LL}$</th></tr><tr><td>Unknown</td><td>1.45</td></tr><tr><td>$ADTT \geq 5{,}000$</td><td>1.45</td></tr><tr><td>$ADTT \leq 1{,}000$</td><td>1.30</td></tr></table></td><td>up to the vehicle and traffic condition</td></tr>
</table>

| | | | | |
|---|---|---|---|---|
| | *IM* | *IM* = 0.33 | *IM* = 0.33 | *IM* = 0.33<br>(below 10 Mph, *IM* = 0) |
| Member Strength | Capacity | $C = \phi_c \phi_s \phi R_n$ | | |
| | $R_n$ | Nominal strength | | |
| | Resistance factor | $\phi$ : same as the factor in AASHTO LRFD | | |
| | Condition factor | to the increased uncertainty in the resistance of deteriorated members<br>Good or Satisfactory (6 or higher) : $\phi_c = 1.00$ , Fair (5) : $\phi_c = 0.95$ , Poor (4 or lower) : $\phi_c = 0.85$ - SI & A Item 59 | | |
| | System factor | to reflect the level of redundancy of the complete superstructure system | | |

When evaluating the load carrying capacity by AASHTO LRFR, member strength is calculated by applying the same concept as AASHTO LRFD, and material strength and coefficients are presented to reflect the characteristics of the existing bridges. First, in the case of material strength, the design strength is basically applied, and when the quality of concrete is uncertain, the compressive strength by the core compression test could be applied. In here, the content that is different from the Detailed Guideline of Korea is to present a statistical correction equation for core strength. In the case of old bridges, structural safety could be reduced due to core extraction, and in many cases, it's impossible to extract a sufficient number of cores for practical reasons such as working conditions. In addition, the variability of the core compressive strength could increase in the aged concrete member compared to the newly placed concrete member by Bartlett and MacGregor (1995). Therefore, the compressive strength with a small amount of core could be overestimated, so it's prescribed to apply statistically equivalent specified compressive strength as in Equation 2.4.

$$f_c^{'} = f_{c,mean}^{'} - 1.65\sigma \tag{2.4}$$

where, $f_{c,mean}^{'}$ is the average compressive strength by the core compression test, $\sigma$ is the standard deviation of compression test strength, $f_c^{'}$ is the equivalent specified compressive strength, and a factor 1.65 is to provide a 95% confidence limit

And, it's possible to apply a condition factor according to the member surface condition of the concrete bridges as optional. A member with poor appearance

condition increases the possibility of lower strength and further deterioration until the next bridge evaluation. However, the quantitative evaluation of the appearance state of the member hasn't yet been clearly figured out. Thus, MBE presents the approximate conversion to select the condition factor based on the results of NBI condition ratings

AASHTO LFR and ASD methods assess the rating factor of the existing concrete bridges to according to the concept of AASHTO Standard Specifications for Highway Bridges, hereinafter as AASHTO Standard, which is the bridge design standard in the past. Similar to LRFR method, live load factors are presented according to Inventory Rating Level and Operating Rating Level. The former evaluates the load carrying capacity at the level of AASHTO Standard by considering the current state (deterioration, loss of section, etc.) of the bridges. The latter evaluates the capacity of a bridge member for the maximum allowable live load.

LFR and ASD, which are load rating methods, refer to the strength design method and the allowable stress method, respectively. The method by LFR is similar to the Korean Detailed Guideline, and the assessment formula is the same as Equation 2.5.

$$RF = \frac{C - A_1 D}{A_2 L(1+I)} \tag{2.5}$$

where, $C$ is the member strength, $A_1$ is the dead load factor, $A_2$ is the live load factor, $D$ is the dead load effects, $L$ is the live load effects, $I$ is the dynamic load allowance of AASHTO Standard

The member strength is calculated according to the AASHTO Standard by reflecting the current state of the existing bridge member, and the strength reduction factor is the same as the Standard. The dead load, dead load factor, live load and dynamic load allowance are also the same as the design criteria. For the live load factor, 2.17 for Inventory Rating Level and 1.30 for Operating Rating Level are applied.

#### 2.2.2.3 Canada CSA S6-14 (2014)

Section 14 'Evaluation' of Canadian Highway Bridge Design Code S6-14, hereinafter CSA S6-14, deals with the method of evaluating the structural safety of existing bridges. By applying the design concept of CSA S6-14, the rating factor of concrete bridge members is calculated.

A characteristic of the Canadian method is that the target reliability index is determined according to three items; the structure behavior, element behavior, and condition inspection level. First, the system behavior is about the redundancy of the bridge's structure system. The effect of destruction of members on the overall collapse of the bridge is divided in to three stages S1, S2 and S3. And the ductile behavior of members is divided into three stages E1, E2, and E3. Finally, the inspection level performed on the corresponding bridge is divided into INSP1, INSP2, and INSP3. The higher level of condition inspection is performed, the lower target index could be applied. The target reliability index for each item is in Table 2.12.

**Table 2.12 Target reliability index of CSA S6-14**

| System behavior category | Element behavior category | Inspection level | | |
|---|---|---|---|---|
| | | INSP1 | INSP2 | INSP3 |
| S1 | E1 | 4.00 | 3.75 | 375 |
| | E2 | 3.75 | 3.50 | 3.25 |
| | E3 | 3.50 | 3.25 | 3.00 |
| S2 | E1 | 3.75 | 3.50 | 3.50 |
| | E2 | 3.50 | 3.25 | 3.00 |
| | E3 | 3.25 | 3.00 | 2.75 |
| S3 | E1 | 3.50 | 3.25 | 3.25 |
| | E2 | 3.25 | 3.00 | 2.75 |
| | E3 | 3.00 | 2.75 | 2.50 |

The rating factor evaluation formula is the same as Equation 2.6.

$$F = \frac{UR_r - \sum \alpha_D D - \sum \alpha_A A}{\alpha_L L(1+I)} \tag{2.6}$$

Where, $U$ is the resistance adjustment factor, $R_r$ is the member strength, $\alpha_D$ and $\alpha_A$, $\alpha_L$ are load factors for force effects due to dead loads, load factors for force effects due to extra loads, load factors for force effects due to live loads, respectively, $D$, $A$ and $L$ are unfactored dead load effect, force effects due to additional loads, and unfactored live load effect, respectively, I is the dynamic load allowance

The strength of member is determined by multiplying the strength calculated by applying the material factor by the resistance adjustment factor. The factor is depending on the material, member types, and rebar ratio. When calculating the member strength, if the core compression test is performed, it's stipulated to apply

the compressive strength corrected by the formula (Equation 2.7) similarly to the US AASHTO MBE.

$$f_c^{'} = \overline{f}_c \left[ 1 - 1.28 \left[ (k_c V)^2 / n + 0.0015 \right]^{0.5} \right] \tag{2.7}$$

where, $\overline{f}_c$ is the average compressive strength modified to account for diameter and moisture condition of the core, $V$ is the coefficient of variation of the core strengths, $n$ is the number of cores, $k_c$ is the coefficient variation modification factor as the number of cores.

The load effects due to the dead load is calculated in the same way as in CSA S6-14. In case of live loads, it's determined according to the evaluation level. Evaluation Level 1 refers to general vehicle trains, Evaluation Level 2 refers to two-unit vehicles, and Evaluation Level 3 refers to single-unit vehicles. For the dynamic load allowance, the same value as in CSA S6-14 is applied according to each live load type.

As mentioned earlier, the target reliability index is determined according to the structural type, member type, and condition inspection level of the bridge. The dead load and live load factors according to the target reliability index are same as Table 2.13

where, D1 is the dead load of cast-in-place or factory-fabricated concrete members, D2 is the dead load of the cast-in-place floor plate, non-structural members, and the measured thickness of the pavement, and D3 is the dead load of the pavement assuming a thickness of 90 mm.

**Table 2.13 Dead and live load factors as target reliability index**

| Load types | | Target reliability index, $\beta$ | | | | | | | | |
|---|---|---|---|---|---|---|---|---|---|---|
| | | 2.00 | 2.25 | 2.50 | 2.75 | 3.00 | 3.25 | 3.50 | 3.75 | 4.00 |
| Dead load | D1 | 1.03 | 1.04 | 1.05 | 1.06 | 1.07 | 1.08 | 1.09 | 1.10 | 1.11 |
| | D2 | 1.06 | 1.08 | 1.10 | 1.12 | 1.14 | 1.16 | 1.18 | 1.20 | 1.22 |
| | D3 | 1.15 | 1.20 | 1.25 | 1.30 | 1.35 | 1.40 | 1.45 | 1.50 | 1.55 |
| Live load | | - | - | 1.35 | 1.42 | 1.49 | 1.56 | 1.63 | 1.70 | 1.77 |

### 2.2.2.4 UK CS 454 (2020) & CS 455 (2020)

In the UK, the concept of bridge design code is applied to calculate the safety factor (*SF*) of the existing concrete bridges. In the process of structural assessment, first the 'structural review' is performed when serious damage or deterioration is investigated or there is a considerable change in the regular condition inspection. The structural review is to check the information of the bridge, safety assessment results in the previous evaluation reports, etc. After that, in order to evaluate the structure safety, the current condition of the existing bridge is investigated in detail through field inspection and survey. Based on the results of this inspection, safety assessment is performed and the assessment is divided into three stages; Level 1, Level 2 and Level 3. First in Level 1, the safety factor is calculated through a simple structural analysis by applying the material properties on the conservative side. If the *SF* in Level 1 is lower than 1.0, more detailed analysis such as nonlinear or plastic analysis is performed in Level 2. If the safety factor doesn't satisfy the required level even in Level 2, structure safety evaluation is performed with material properties from testing samples, or with bridge-specific assessment live

loading models from the measurement of loading data. As such, it's stipulated to conduct a safety assessment according to the current condition of the existing bridges and the results of structural analysis.

The safety factor evaluation is performed by Equation 2.8.

$$R_a^* \geq S_a^*(=\gamma_{f3}(effects\ of\ Q_a^*)) \tag{2.8}$$

where, $R_a^*$ is a member strength, $S_a^*$ is load effects due to dead and live loads, $Q_a^*$ is dead and live loads, $\gamma_{f3}$ is a factor that takes account of inaccurate assessment of the load effects.

When calculating the member strength ($R_a^*$), a different material factor is applied depending on whether the characteristic strength and the worst credible strength are applied. For example, when the characteristic compressive strength value of concrete is used, the material factor is 1.50, and when the core compressive strength is applied, the material factor of 1.20 is applied. The detailed material factor according to the material of the concrete bridge is in Table 2.14.

**Table 2.14 Material factors in CS 454**

| | | | Characteristic strength | Worst credible strength |
|---|---|---|---|---|
| $\gamma_{mc}$ | Concrete | | 1.50 | 1.20 |
| $\gamma_{mv}$ | Shear in concrete | | 1.25 | 1.15 |
| $\gamma_{mb}$ | Bond | | 140 | 1.25 |
| $\gamma_{ms}$ | Reinforcement, prestressing tendons | All except Grade 460 | 1.15 | 1.10 (1.05 when depth measured) |
| | | Grade 460 | 1.05 | 1.05 |

If material tests are performed for safety assessment, the strength correction formula is stipulated to be applied in the same way as the US and Canada. If the core compressive strength corresponding to the lower 5% is applied based on the estimated coefficient of variation of the bridge, Equation 2.9 is applied. On the other hand, if the average strength is estimated based only on the compression test data of the core specimen, Equation 2.10 is applied.

$$f_{cu} = \frac{\sum f_{cui}}{n}\left(1 - 1.64\left(\frac{1}{n}+1\right)^{0.5} V_p\right) \tag{2.9}$$

$$f_{cu} = \frac{\sum f_{cui}}{n} - \frac{t_{0.05}}{\sqrt{n}} s \tag{2.10}$$

where, $f_{cui}$ is the compressive strength of each core samples, $n$ is the number of core specimens, $V_p$ is the coefficient of variation of the core test data,

$s$ is the standard deviation of the core test data, $t_{0.05}$ is the lower 5% value in Student's t-distribution and is related to the number of core samples.

In the case of UK guideline, the correction formula to be applied when performing tensile tests for prestressing and reinforcing bars is also stipulated. In general, the characteristic strength is applied. When a tensile test is performed, a correction formula (Equation 2.11) according to the number of specimens and the standard deviation of the tensile test data is applied.

$$f_u = \frac{\sum f_{ui}}{n} - t_{0.01} \frac{s}{\sqrt{n}} \tag{2.11}$$

where, $f_{ui}$ is the yield strength of each specimen, $n$ is the number of specimens, $s$ is the standard deviation of the tensile test strength data, and $t_{0.01}$ is the coefficient determined by the number of specimens.

The dead load and live load factors use the same values as the design code. In the case of live load, the vehicle load according to the traffic volume, road surface condition, and the possibility of passing an overloaded vehicle of the bridge subject to the safety assessment. For normal traffic, the assessment live load (ALL) 1 or 2 model is applied.

### 2.2.3 Loading Tests

The loading tests measure and evaluate the behavior of the existing bridges by applying a specific vehicle load within the elastic range of the bridge. By loading a known vehicle load, the structural performance of the bridge members and the whole system could be evaluated, and the load carrying capacity of the bridge evaluated through analysis could be verified experimentally (AASHTO MBE, 2018).

There are two types of loading tests according to the purpose of the test. The former is the diagnostic test which is to evaluate the behavior of the bridges for a specific vehicle load (deflection, strain and the distribution effect of the load, etc.). The second one is the proof test which could be used to check the maximum load that the bridge. The loading tests mainly performed in Korea is the diagnostic tests.

Classification according to test type can be divided into static loading test and dynamic load test. The static load test is performed with a static load that does not induce vibration of the bridge, and the deflection and strain caused by the vehicle load are measured. The dynamic loading test is performed through a load that changes or moves with time, and measures the vibration mode, frequency, impact factor, load history and stress range required for fatigue evaluation due to the moving load.

According to AASHTO MBE, the effects that could be obtained through the loading test are as follows.

① Load carrying capacity of bridges without information

② Evaluation of actual load carrying capacity of bridges which are low rated

③ Load distribution of the existing bridges

④ Effects of deteriorated or damaged members

⑤ Fatigue evaluation

⑥ Actual impact factor

### 2.2.3.1 Korea Detailed Guidelines (2019)

If the safety factor, *SF* evaluated by structural calculation according to the Detailed Guideline is between 0.9 and 1.0, the safety assessment grade would be calculated by performing the load carrying capacity and the loading test. If the load carrying capacity is greater than or equal to the design live load, the safety assessment grade is B, and if it's less than the design live load, the grade of C is calculated.

The load carrying capacity, $P$ of the concrete bridge during public use is calculated by Equation 2.12.

$$P = K_s \times RF \times P_r \tag{2.12}$$

where, $K_s$ is the response adjustment factor, $RF$ is the rating factor, $P_r$ is the design live load

The response adjustment factor, Ks is calculated based on the results measured in the static and dynamic loading tests as in Equation 2.3. According to the 'Bridge Load Carrying Capacity Evaluation Manual' published by Korea Facility Safety & Technology Institute, the response ratio by concrete stress is unreliable due to damage and defects such as cracks or non-homogeneity of

materials in the case of concrete bridges. So, using response ratio by deflection is recommended.

The impact factor is calculated by comparing the maximum response of the dynamic the static loading tests. The ratio of the impact factor calculated by the test and the theoretical method according to the design criteria is applied.

The detailed guideline suggests the cases in which the loading test is necessary and cases in which it's not necessary. When a loading test is required: ① the load carrying capacity and behavior of a bridge can't be evaluated by a theoretical method due to insufficient design documents, ② when strengthening with changes in the bridge structure system is implemented or some members are replaced, ③ when want to evaluate the actual load carrying capacity because the capacity by analysis of the bridge is below the required level, ④ if it's judged that accurate load carrying capacity evaluation is impossible only with the theoretical method due to deterioration of the bridge and overall deterioration and damage of materials, ⑤ the first bridge evaluation to get initial value, ⑥ in the case of evaluating the dynamic characteristics of other bridges, etc.

On the other hand, if the condition inspection results of the bridge are good and the load carrying capacity evaluated by the theoretical method is higher than the required level, or if the bridge is seriously deteriorated or damaged and needs urgent reinforcement, or if the evaluation personnel judges that loading test is not necessary states that the loading test is unnecessary.

### 2.2.3.2 USA AASHTO MBE (2018)

In the United States, when evaluating the structural performance of a concrete bridge, the load carrying capacity is basically evaluated through structural analysis. The loading test is used as a supplementary measure, such as when the capacity assessed through the analysis is not sufficient. There are two types of tests: diagnostic tests similar to the Korean test and proof tests to examine the maximum allowable load. If it's judged that the load carrying capacity calculated through structural analysis doesn't sufficiently reflect the actual bridge behavior, the actual capacity of the bridge is evaluated using Equation 2.14 by applying the adjustment factor evaluated through the loading test.

Adjustment factor, $K$ is calculated in the following way, and if $K$ is greater than 1, it is judged that the actual structural performance of the bridge is good compared to the structural analysis.

$$K = 1 + K_a K_b \tag{2.13}$$

$$RF_T = RF_C \times K \tag{2.14}$$

$$K_a = \frac{\varepsilon_c}{\varepsilon_T} - 1 \tag{2.15}$$

$$\varepsilon_c = \frac{L_T}{(SF)E} \tag{2.16}$$

where, $K_a$ is the ratio of the maximum strain, $\varepsilon_T$ measured in the static loading test and the strain, $\varepsilon_c$ at the corresponding location by the theoretical method. $L_T$ is the section force by structural calculation, $SF$ is the section

modulus, $E$ is the elastic modulus of the member, $K_b$ is a coefficient that reflects the structural performance of the bridge that could be improved through the loading test and determined by Table 2.15. $T$ is the magnitude of test load and $W$ is the magnitude of load in analysis.

**Table 2.15 USA loading test adjustment factor $K_b$**

| Extrapolation of test result | | Magnitude of test load | | | $K_b$ |
|---|---|---|---|---|---|
| Yes | No | $\frac{T}{W} < 0.4$ | $0.4 < \frac{T}{W} < 0.7$ | $\frac{T}{W} > 0.7$ | |
| O | | O | | | 0 |
| O | | | O | | 0.8 |
| O | | | | O | 1.0 |
| | O | O | | | 0 |
| | O | | O | | 0 |
| | O | | | O | 0.5 |

#### 2.2.3.3 Canada CSA S6-14 (2014)

In the same way as the US MBE, when it is judged that the load carrying capacity of the concrete bridges evaluated through analysis is not sufficient, and when it is necessary to specially evaluate the actual structural response to the live load of the entire bridge or members, a load test is performed. In the case of the load test, it is stipulated to be carried out only when it is judged that a more accurate structural performance evaluation is possible due to the test execution because a large budget is required. And it is stipulated that condition inspection and pre-structural analysis must be performed before carrying out the loading test. In the case of correcting the load carrying capacity by structural calculation through the test, the modulus section force due to the live load is divided by the section force obtained by the load test.

#### 2.2.3.4 UK CS 463 (2019)

If the safety factor is not secured through analysis in the absence of any special damage or deterioration of the bridge, the actual structural performance of the bridge can be evaluated through the loading test. It is stipulated that the test is performed only when the structural performance of the bridge evaluated by applying all available information (material tests, similar bridge cases, safety diagnosis and repair and reinforcement history, etc.) does not satisfy the required performance. And it is carried out when the structural performance of the bridge evaluated through the loading test is expected to improve. The types of loading test are supplementary load tests (for the purpose of supplementing the results of

structural analysis) and - proving load tests (to evaluate the safety of a bridge performed instead of structural analysis when structural analysis is judged to underestimate the actual structural performance of the bridge).

A guideline for the supplementary load testing of bridge (Institution of Civil Engineers, 1998) is presented as a reference manual for load testing. However, unlike the Korean Detailed Guideline or AASHTO MBE, it doesn't explain how to correct the load capacity evaluation with the load test results.

### 2.2.4 Grade

#### 2.2.4.1 Korea Detailed Guideline (2019)

In the case of Korea, the Detailed Guideline covers everything, condition inspection, safety assessment, loading test and grade. The condition inspection grades are calculated for each member according to the results of the external examination and material test rating as shown in the Table 2.16 and Table 2.17. The condition evaluation grade of the entire bridge is calculated by applying a weight to the condition evaluation grade evaluated for each member. The safety assessment grade is basically calculated by the safety factor (*SF*) by structural calculation. And when *SF* is between 0.9 and 1.0, the safety grade is determined based on the rating factor (*RF*) and the load carrying capacity through the loading test.

**Table 2.16 Member condition inspection grade (Examination and Diagnosis)**

| Member type | | Grade |
|---|---|---|
| Superstructure | Deck, girder, cable | a ~ e |
| | Secondary members | a ~ d |
| Substructure | Abutment, pier, foundation, pylon | a ~ e |
| Bearing | Bearing | a ~ e |
| Other members | Expansion joint, kerb, drainage, pavement | a ~ d |
| Material | Carbonation, chloride contamination | a ~ d |

**Table 2.17 Member condition inspection grade (Performance Assessment)**

| Member type | | | Grade |
|---|---|---|---|
| Condition Safety Performance | Superstructure | Deck, girder, cable | a ~ e |
| | | Secondary members | a ~ d |
| | Substructure | Abutment, pier, foundation, pylon | a ~ e |
| | Bearing | Bearing | a ~ e |
| | Other members | Expansion joint, kerb, drainage, pavement | a ~ d |
| Durability Performance | Carbonation depth | | a ~ e |
| | chloride contamination | | a ~ e |
| | Surface concrete condition (Rebound test) | | a ~ d |

In the case of Full Safety Diagnosis that performs both condition inspection and safety assessment, the lower of the inspection level and the assessment level is determined as the safety grade of the bridge. In the case of Full Safety Examination that only performs condition inspection, the inspection grade becomes the safety level of the bridges. In the case of Performance Assessment, safety performance, durability, and serviceability performance grades are evaluated, and the comprehensive safety performance grade is calculated by applying a weight between each item. Safety performance consists of condition safety performance by visual inspection and structure safety performance through safety assessment, and the lower of the two performance grades is determined as the safety performance grade. The durability performance of concrete bridges is evaluated through NDT and material testing corresponding to the deterioration progress and deterioration environment item. The last performance is the performance to satisfy the purpose of serviceability based on the user's convenience and design criteria to

be secured during the service age of the bridge. The bridge status and performance for each grade defined in the Examination and Diagnosis and Performance Assessment are as follows in Table 2.18 and Table 2.19.

**Table 2.18 Bridge Safety Grade Criteria**

| Grade | Bridge Condition |
|---|---|
| A<br>(Very good) | - Best condition with no problems |
| B<br>(Good) | - Minor defects on secondary members, but no problem with the function and some repairs are required to improve durability |
| C<br>(Fair) | - Minor defects on primary members or extensive defects on secondary members, but no problem with safety of the facility<br>- Some repairs are required to improve durability and serviceability of primary members or simple strengthening of secondary members |
| D<br>(Poor) | - Defects on primary members and urgent repair and strengthening is required, and need to consider load posting |
| E<br>(Very poor) | - A condition in which there is a risk to the safety of the facility due to severe defects on primary members<br>- Immediate load posting and strengthening is required |

**Table 2.19 Bridge Performance Grade Criteria**

| Grade | Bridge Condition |
|---|---|
| A<br>(Very good) | - No problem on exterior defects and damage and low possibility of deterioration of durability<br>- Level of performance that could accommodate changes in external environmental conditions |
| B<br>(Good) | - Minor defects or possibility of durability's deterioration on some members<br>- Level of performance at which progress should be continuously observed and repairs made in consideration of external environmental conditions |
| C<br>(Fair) | - Defects or durability deterioration observed in extensive members and some problems in function and serviceability<br>- No problem with safety of the facility and simple repairs and strengthening are required |
| D<br>(Poor) | - Performance level is at a level that makes continuous use of the facility difficult because the performance doesn't meet the standards |
| E<br>(Very poor) | - A level of performance that requires urgent load posting and strengthening or repairs to a level that threatens the safety of the facility due to severe defects or deterioration in durability |

#### 2.2.4.2 USA FHWA (1995)

US Federal Highway Administration (FHWA) published a guideline for recording information on the existing bridges and the results of condition inspection performed. All information and bridge evaluation results are coded numerically and stored in National Bridge Inventory (NBI). Among them, the contents related to the bridge evaluation grade are follows.

The Condition Ratings of the existing bridges are divided into three parts: deck, superstructure and substructure and recorded on a numeric scale from 0 to 9. The closer the evaluated rating is to 9, the better condition. If the Ratings evaluated through the condition inspection are 4 (Poor) or less, the bridge is classified as Structurally Deficient (SD). According to the Virginia Department of Transportation, a bridge designated as SD doesn't mean that it will collapse soon or lack structural safety, but it means that monitoring or maintenance is required because of its poor condition.

The example of the load carrying capacity rated by the Inventory Rating and Operating Rating is as shown in Figure 2.1. The rating method and capacity are recorded with a numeric code, and the grade is not calculated accordingly. If the rated load carrying capacity doesn't satisfy the required level, actions such as maintenance and strengthening or load posting could be taken.

```
     ********** LOAD RATING AND POSTING ******** CODE
(31) DESIGN LOAD       -      H-15  OR  M-13.5      2
(63) OPERATING RATING METHOD -     LOAD FACTOR      1
(64) OPERATING RATING -                MS-14     25.2
(65) INVENTORY RATING METHOD -     LOAD FACTOR      1
(66) INVENTORY RATING -                MS-11     19.8
(70) BRIDGE POSTING    - POSTING REQUIRED           2
(41) STRUCTURE OPEN, POSTED OR CLOSED -             P
        DESCRIPTION - POSTED FOR LOAD
```

**Figure 2.1 Example of USA load rating**

Appraisal Ratings evaluate the existing bridges from the level of service point of view. The serviceability of bridges is compared with that of bridges constructed according to current standards. Evaluation items are divided into four items: Structural Evaluation, Deck Geometry, Underclearances Vertical and Horizontal, and Bridge Posting. Structural Evaluation evaluates the load carrying capacity evaluated by the Inventory Rating of the bridge according to the Average Daily Traffic (ADT).

### 2.2.4.3 Canada Alberta Transportation (2020)

When grading the existing bridges in Alberta, Canada, the results of condition inspection according to member types are recorded in numerical grades. Similar to the US FHWA, it is divided into grades from 1 to 9, and the closer to grade 9, the better condition of the bridge. In the case of safety assessment, grading is not performed. If the calculated rating factor does not satisfy the required level, follow-up actions such as repair and strengthening and bridge posting could be considered.

#### 2.2.4.4 Japan MLIT (2014)

Similar to the case of Canada, grades are calculated according to the condition inspection results, and maintenance plans are presented accordingly.

**Table 2.20 Condition inspection grade in Japan**

| Grade | Description | Actions |
|---|---|---|
| I | • Function of structure is not hindered | - |
| II | • No hindrance to the function of structure, but desirable to take preventive action | • Monitoring and actions depending on situation |
| III | • Possibility for function of structure may be disturbed, early actions should be taken | • Early monitoring and actions are required |
| IV | • Function of structure may be disrupted or possibility is very high, urgent actions should be taken | • Urgent actions are required |

## 2.3 Analysis of Actual Bridge Evaluation Cases

In this chapter, actual bridge evaluation reports of Korea and other countries were obtained and analyzed. Through this review, how the existing concrete bridge's evaluation has been actually performed and the results evaluated by the current guidelines were analyzed in detail. The analyzed cases include a research report that collected and analyzed evaluation reports on bridges located on highways in Korea, evaluation reports of concrete bridges on Seoul, and Performance Assessment reports by the Korea Long Life Bridge Center, hereinafter as KLLBC. In addition, bridge evaluation reports in the US and France were also analyzed.

First, in 2013 and 2015, the Korea Expressway Corporation Research Institute, hereinafter as KECRI, collected the Full Safety Examination and Full Safety Diagnosis reports conducted between 1996 and 2010 for bridges located on Korean highways, and analyzed the overall status of the bridges, such as bridge types, superstructure types, construction year, safety grade, etc. And types and causes of damage, defect and deterioration of each member were classified and identified. Through this work, it was possible to know the frequency and cause of the problems of the existing concrete bridges by members. And the evaluation reports of the existing concrete bridges located in Seoul were analyzed. Of the total 482 bridges in Seoul, 230 has been managed by the Seoul Metropolitan Government, hereinafter as Government. Among then, the reports of 29 bridges could be obtained and analyzed whose evaluation reports were open in the Seoul Plaza Communicate Information (Bridges on the Han River were excluded for study). Among those 29 bridges, 13 bridges that were completed in 1966 and 1987, had a

service life of over 30 years, and whose design drawings were secured were reviewed. PSC-I bridges take the largest share and the rest of bridges are RC-T and RC slab bridges. Among them, 6 cases of rebound hardness test and 4 cases of carbonation depth test were confirmed to track the history of NDT and material test in Korea.

And the contents of the evaluation reports commissioned by KLLBC for the purpose of research were analyzed. The analyzed bridge evaluation reports could be divided by subjects: evaluation reports of decommissioned bridges in service, 2 times of loading tests of Hannam-2 overpass, Performance Assessment reports of Class-III bridges.

Finally, for existing bridges in USA and France, how the bridge evaluation is being performed abroad was investigated. In the case of United States, it's a routine inspection report and a special safety report for plan of strengthening on Theodore Roosevelt Bridge located in Washington D.C. For France, two special evaluation cases of bridges where severe damage and deterioration were found in the regular inspection was analyzed.

**Table 2.21 Cases of actual bridges evaluation**

| | Bridge name | Structure type | Built year | Safety grade | | Design live load |
|---|---|---|---|---|---|---|
| | | | | Condition inspection | Safety assessment | |
| 1 | Seosumun overpass | PSC-I | 1966 | B | A | DB-18 |
| 2 | | RC T | 1966 | B | A | DB-18 |
| 3 | Mokdong bridge | PSC-I | 1968 | C | B | DB-18 |
| 4 | | PSC-I | 1968 | C | B | DB-18 |
| 5 | Ahyn overpass | PSC-I | 1968 | C | A | DB-18 |
| 6 | | RC Slab | 1968 | C | A | DB-18 |
| 7 | Banpo bridge | PSC-I | 1970 | B | A | DB-18 |
| 8 | Hannam-2 overpass | PSC-I | 1976 | B | A | DB-18 |
| 9 | Garibong railway overpass | PSC-I | 1977 | C | A | DB-18 |
| 10 | Guro overpass | PSC-I | 1977 | C | A | DB-18 |
| 11 | Wookcheon overpass | PSC-I | 1979 | B | A | DB-18 |
| 12 | Gwanak-dorim bridge | PSC-I | 1983 | B | A | DB-24 |
| 13 | Hwarang overpass | PSC-I | 1984 | C | A | DB-24 |
| 14 | Gunsunggang bridge | PSC-I | 1975 | C | D | DB-18 |

| | | | | | | |
|---|---|---|---|---|---|---|
| 15 | Mojeon bridge | Ramen | 1975 | C | A | DB-18 |
| 16 | Sansung-woochun bridge | PSC-I | 1975 | C | C | DB-18 |
| 17 | Maji-2 bridge | RC T | 1985 | C | B | DB-13.5 |
| 18 | Bekkseok-2 bridge | RC Slab | 1995 | C | A | DB-24 |
| 19 | Bugok bridge | RC Slab | 1999 | B | A | DB-18 |
| 20 | Agame bridge | RC Slab | 1999 | B | A | DB-18 |
| 21 | Theodore Roosevelt Bridge | RC T, RC Slab | 1964 | 5 | - | - |
| 22 | | | | | | |
| 22 | Paris bridge in Beauvais | PSC | 1950 | - | - | - |
| 23 | Chavanon Bridge | Suspension | 2000 | - | - | - |

### 2.3.1 Statistics of Problems of Highway Bridges in Korea

As of 2011, there were a total of 7,805 bridges on Korean highways. The KECRI analyzed 956 reports of 915 bridges for which the Diagnosis was performed under the supervision of Korea Expressway Corporation from 1966 to 2010. Through the analysis, the overall status of the existing bridges on highways for which the Diagnosis was performed, the type of problems by member and the cause of the occurrence were identified.

Since the Diagnosis is mainly carried out for Class-I bridges, the class of bridges accounted for the majority of the reports. Therefore, it was different from the superstructure type ratio of the total bridges in Korea (RC ramen and RC slab types accounted for the highest ratio of the total bridges).

**Table 2.22 Status of highway and whole bridges in Korea (2011)**

| Items | Highway bridges | Whole bridges |
|---|---|---|
| Class | I: 47.9%, II: 17.1%, others: 35.0% | I: 10.4%, II: 16.0%, others: 73.5% |
| Condition grade | A: 1.1%, B: 69.9%, C: 28.5%, D: 0.5% | - |
| Year | 0~10: 12.0%, 11~20: 62.7%, 21~30: 17.5%, 31~40: 7.8% | 0~10: 46.5%, 11~20: 34.0%, 21~30: 10.2%, 31~40: 5.5% |
| Superstructure types | STB: 39.8%, PSC-I: 14.2%, PSCB: 12.1%, Ramen: 8.3% | STB: 13.1%, PSC-I: 18.3%, PSCB: 2.4%, Ramen: 22.0% |
| Live design load | DB-13.5: 2.7%, DB-18: 25.8%, DB-24: 71.5% | DB-13.5: 6.3%, DB-18: 14.7%, DB-24: 76.7% |

The average year of the bridges to be analyzed was 16.4 years, which is not in a state of much deterioration. As shown in Table 2.22, the status of the bridges analyzed in the report and the bridges in Korea was compared. Although there are differences in the status with the whole Korean bridges, the result was from more than 900 Diagnosis reports, so the data from the reports was judged to be worth of reference.

According to the analysis results, the damage and deterioration rate of auxiliary elements such as expansion joints, pavement, and bearing in the superstructure of the bridges was about 73%, which was much higher than that of main elements. In the main elements, the ratio of the deck was the highest for damage and deterioration. As a result of arranging the status of elements corresponding to ‘d’ or ‘e’ grades in the condition inspection, expansion joints, bridge pavements, drainage, bearings and deck account for a high proportion in the order as shown in Figure 2.2. It was identified that the repair or strengthening actions for the elements were completed after the Diagnosis. As such, it could be seen that most of the problems occurring in the existing concrete bridges happens in non-structural elements

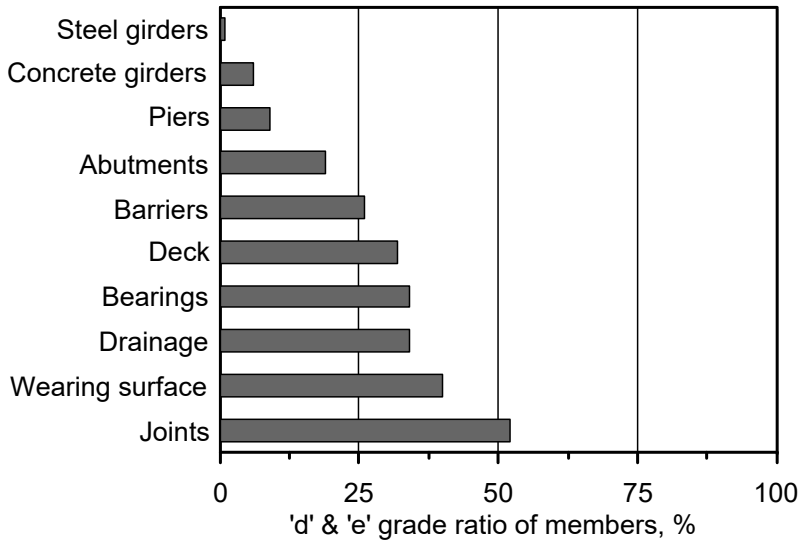


**Figure 2.2 Ratio of lower grade than 'd' in condition inspection by elements**

### 2.3.2 History of NDT and Material Tests in Korea

In Korea, the Examination are performed regularly every 1 to 3 years depending on the safety grade of the bridges. And rebound hardness test and carbonation depth tests are performed at every inspection as basic tasks. Kim (2019) collected and analyzed the test results for each inspection for the existing bridges in Seoul where the history analysis of rebound and carbonation depth was possible.

### 2.3.2.1 Rebound Hardness History

The history of rebound test of the concrete bridges in Seoul is shown in Figure 2.3 and Figure 2.4. As can be seen from the graph, it's difficult to track the tendency of concrete compressive strength of the existing bridges from the history of the rebound hardness tests performed by year. The estimated compressive strength of RC decks and PSC girders didn't increase or decrease with a specific trend at each. Even though it's the same bridge, the rebound hardness drastically increased or decreased during the two-year interval of the inspection. It's judged that this is because the location of the test and working proficiency level of the operator are different for each inspection.

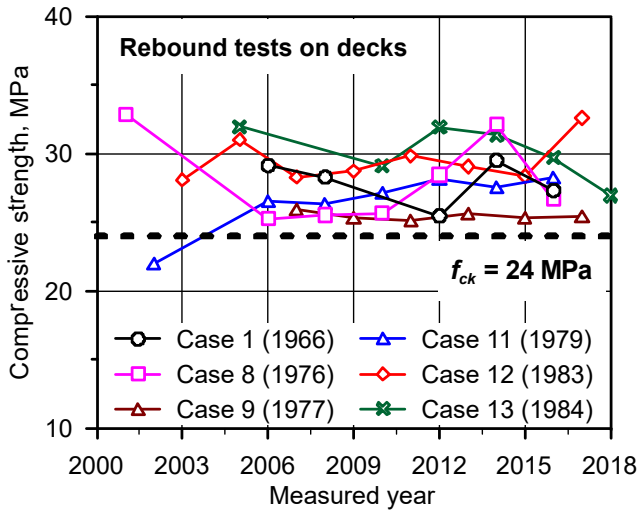


**Figure 2.3 History of rebound test – RC deck**

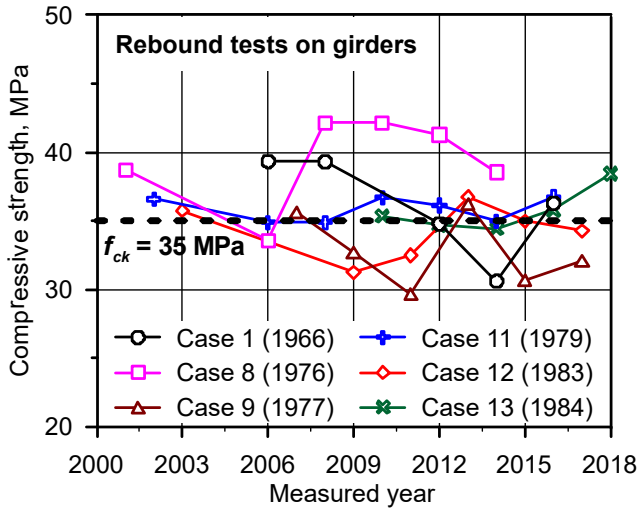


**Figure 2.4 History of rebound test – PSC girder**

And in the current Guideline of Korea, the rebound hardness test describes the evaluation method so that the externally sound parts and the defective parts are comparatively evaluated. However, as a result of analyzing the previously performed rebound test data, the comparison between the sound part and the poor part was not carried out properly. Even if the rebound test was performed on a defective part in appearance, the photo and type of deterioration were not described in detail in the report. Instead, in the most of the evaluation reports, the condition of the member's concrete cover was evaluated by comparing the estimated compressive strength and the design compressive strength. In order to evaluate the condition of the surface concrete of the bridge by comparing the compressive strength estimated by the rebound test with the design compressive strength, the accuracy of the strength estimated by the test must be guaranteed. The accuracy of the estimated strength by the rebound hardness method would be verified by material test with decommissioned bridge members in Chapter 3.

The results of rebound test of the bridges are summarized in Table 2.23.

**Table 2.23 Rebound test results by year**

| Case ID | Built Year | Test year | Estimated strength (MPa) | | Test year | Estimated strength (MPa) | |
|---|---|---|---|---|---|---|---|
| | | | Deck | Girder | | Deck | Girder |
| 1 | 1966 | ($f_{ck}$) | 24 | 35 | 2012 | 25.5 | 34.8 |
| | | 2006 | 29.1 | 39.3 | 2014 | 29.5 | 30.6 |
| | | 2008 | 28.3 | 39.3 | 2016 | 27.3 | 26.3 |
| 8 | 1976 | ($f_{ck}$) | 24 | 35 | 2010 | 25.7 | 42.2 |
| | | 2001 | 32.9 | 38.7 | 2012 | 28.5 | 41.3 |
| | | 2006 | 25.3 | 33.6 | 2014 | 32.1 | 38.6 |
| | | 2008 | 25.5 | 42.2 | 2016 | 26.7 | - |
| 11 | 1979 | ($f_{ck}$) | 24 | 35 | 2010 | 27.2 | 36.7 |
| | | 2002 | 22.1 | 36.6 | 2012 | 38.2 | 36.1 |
| | | 2006 | 26.5 | 34.9 | 2014 | 27.6 | 35.0 |
| | | 2008 | 26.4 | 34.9 | 2016 | 28.3 | 36.8 |
| 12 | 1983 | ($f_{ck}$) | 24 | 35 | 2011 | 29.9 | 32.5 |
| | | 2003 | 28.1 | 35.8 | 2013 | 29.1 | 36.8 |
| | | 2005 | 31.0 | - | 2015 | 28.4 | 35.0 |
| | | 2007 | 28.3 | - | 2017 | 32.6 | 34.3 |
| | | 2009 | 28.8 | 31.3 | - | - | - |
| 13 | 1984 | ($f_{ck}$) | 27 | 35 | 2014 | 31.4 | 34.4 |
| | | 2005 | 32.0 | - | 2016 | 29.7 | 35.8 |
| | | 2010 | 29.1 | 35.3 | 2018 | 27.0 | 38.4 |
| | | 2012 | 32.0 | 34.7 | - | - | - |

### 2.3.2.2 Carbonation Depth History

In addition to the rebound hardness test, the current Guideline in Korea evaluates the possibility of corrosion of reinforcing bars by measuring the carbonation depth of the bridge surface in Full Safety Diagnosis. As an evaluation method, the carbonation rate coefficient is calculated through test execution, and the comparative evaluation of apparently sound and defective parts is included.

By analyzing the results of the previously performed carbonation depth test, like the rebound hardness test, a specific trend couldn't be confirmed in the test history by year. Despite the test conducted on the same bridge, a meaningful analysis was not possible because the test results randomly increased or decreased within 2~3 years (interval of bridge evaluation) as shown in Figure 2.5. It's because that the cover thickness, which is the standard value to get the carbonation rate coefficient, was applied differently in the process of calculating the residual depth.

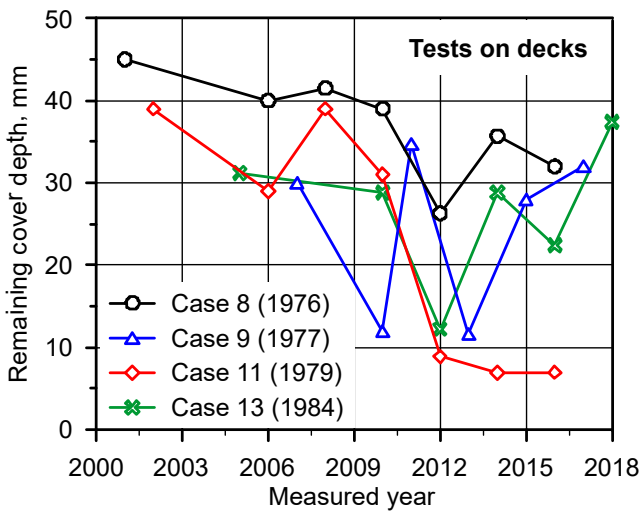


**Figure 2.5 History of carbonation depth test by year**

And in the case of the superstructure members, it was confirmed that the carbonation depth test was mainly performed on the RC deck. The purpose of the test is to estimate the degree of corrosion of rebars, so it's judged that it’s necessary to perform the test on main structural members, such as beams and girders.

### 2.3.3 Comparison of Safety Assessment Results by Korean and Foreign Guidelines

Among the collected Korean concrete bridge evaluation reports, Korean and foreign safety assessment guidelines were applied to 20 bridges with design drawings, and the safety factor and rating factor were compared and analyzed. The applied guidelines are listed below.

① Korea, MOLIT & KISTEC, Guidelines for Safety Inspections and Precise Safety Diagnosis (2019)
② USA, AASHTO, The Manual for Bridge Evaluation 3rd (2018)
③ Canada, CSA, S6-14 Canadian Highway Bridge Design Code (2014)
④ UK, Highways England, CS 455 The assessment of concrete highway bridges and structures (2020)

The comparison of safety assessment for each guideline was performed in the following way. First, the member strength and sectional force were calculated by referring to the drawings and the written bridge evaluation reports. Based on these results, the safety factor and rating factor for bending of main structural elements (PSC girders, RC beams, RC slabs). To compare the assessment results of the safety and rating factor for the same load, the design live load (DB or DL load) of the corresponding bridge was applied, and the member strength calculation method

and load factor prescribed in each guideline were applied. When applying the condition factor according to the exterior condition like AASHTO MBE, the factor according to the condition inspection grade for each member was applied. As a result, the calculated safety factor and rating factor are same as in Figure 2.6.

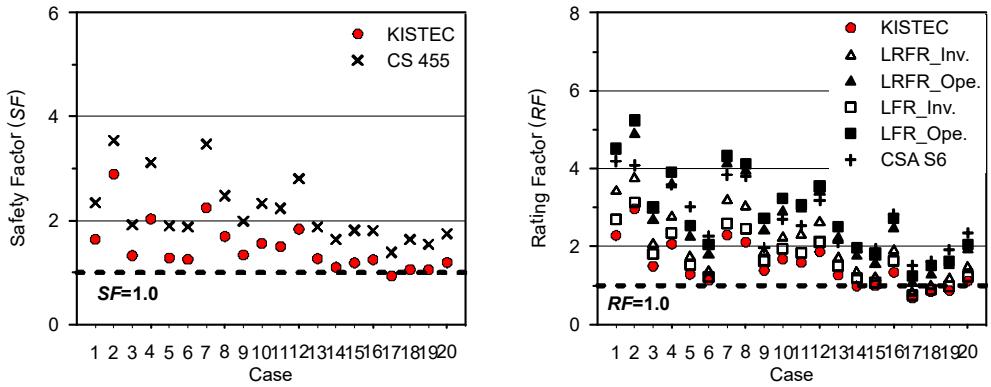


**(a)** **(b)**

**Figure 2.6 Comparison of safety assessment results by country – safety factor (a), rating factor (b)**

As can be seen from the above graph, the safety factor and rating factor by the Korean guideline are lower than those of other countries' guidelines. In Korea, since the structural capacity of the existing concrete bridge elements is evaluated at the same level as the design codes, and the live load factor is always same as the value of design code. And compared to foreign road bridge design standards, the strength reduction factor applied when calculating the member strength is relatively low. Therefore, the assessment results are calculated more conservatively than that of foreign safety assessment guidelines

### 2.3.4 Finite Element Analysis Modeling Methods of Superstructure of Concrete Bridges

Structural analysis models and methods for each type of superstructure were confirmed in 12 bridge evaluation reports of Korea. Structural analysis by finite element analysis (FEA) was performed on all 12 reports by using MIDAS program, and the analysis modeling methods are listed in Table 2.24.

As a result of the analysis, in the case of the PSC-I composite bridges, there are two cases in which the elements of deck and girder were modeled as shell and frame elements, respectively, or the composite cross section of the deck and girder was modeled as frame elements together. Every RC slab bridges were modeled with Shell elements.

**Table 2.24 FEA modeling methods of bridge evaluation reports in Korea**

| Case ID | Span length (m) | Design live load | Structure types | | FEA Element | *RF* | Notes |
|---|---|---|---|---|---|---|---|
| 3, 4 | 15.0<br>30.0 | DB-18 | PSC-I | Deck | Shell | 1.35<br>1.19 | - |
| | | | | Girder | Frame | | |
| 5, 6 | 25.0 | DB-18 | PSC-I | Deck | Shell | 2.11 | - |
| | | | | Girder | Frame | | |
| | 11.0 | | RC S | | Shell | 1.86 | |
| 9 | 30.9 | DB-18 | PSC-I | Deck | Shell | 1.94 | - |
| | | | | Girder | Frame | | |
| | | | PSC-I | | Solid* | - | |
| 12 | 20.0 | DB-24 | PSC-I | Deck | Shell | 2.25 | ASD |
| | | | | Girder | Frame | | |
| 13 | 30.5 | DB-24 | PSC-I | | Frame | 3.25 | 2D Frame |
| 14 | 30.5 | DB-24 | PSC-I | | Frame | 1.13 | 2D Frame |
| 15 | 10.6 | DB-24 | RC Ramen | | Shell | 2.04 | - |
| 16 | 26.3 | DB-24 | PSC-I | Deck | Shell | 1.51 | - |
| | | | | Girder | Frame | | |
| 17 | 12.0 | DB-13.5 | RC T | | Frame | 0.87 | 2D Frame |
| 18 | 13.5 | DB-24 | RC S | | Shell | 1.08 | - |
| 19 | 15.0 | DB-18 | RC S | | Shell | 1.11 | - |
| 20 | 15.0 | DB-18 | RC S | | Shell | 1.11 | - |

*) To analyze the rebar strain in order to evaluate the significantly deteriorated RC deck

The MOCT and KISTEC published manuals in 2002 and 2006, to provide a rational and uniform method to assess the load carrying capacity of the existing concrete bridges. The both load carrying capacity manuals provide structural analysis modeling methods based on the bridge's superstructure types as shown in Table 2.25. It can be seen that the concrete bridge is mainly modeled as a Frame or Shell-Frame elements.

**Table 2.25 Modeling methods of concrete bridges by structure types**

| Superstructure | Materials | Modeling Methods |
|---|---|---|
| RC Slab | Reinforced Concrete | Shell, Frame |
| RC Ramen | Reinforced Concrete | Shell, Frame, Rigid-Frame |
| RC T | Reinforced Concrete | Frame |
| PSC I | Prestressed Concrete | Shell-Frame |
| PSC Box | Prestressed Concrete | Shell-Frame, Rigid-Frame |

According to the manual by KISTEC, the superstructure of a girder bridge is mostly a composite bridge type composed of several girders with high stiffness in the bridge axis direction, deck and crossbeams with high stiffness in the perpendicular or lateral direction of the bridge axis. It's preferable to properly distribute the transverse stiffness to consider the transverse load distribution effect. It's recommended to model the composite cross section of the PSC-I beam bridges with shell elements for deck and frame elements for girders and crossbeams.

### 2.3.5 Current Status of Vehicle Loading Tests in Korea

It analyzed the bridge evaluation reports written between 2010 and 2013 for 9 bridges located in Seoul to figure out the status of the loading tests. Since the revision in 2003, the safety of the existing bridges in Korea basically assessed with safety factor (*SF*) by structural analysis. And if the *SF* is between 0.9 and 1.0, the load carrying capacity could be evaluated with rating factor and the results of loading test. As discussed in Section 2.2.3.1, the Detailed Guideline in Korea suggests cases in which it's necessary or unnecessary to perform a loading test. It's stated that the loading test is unnecessary if the safety of the bridge is higher than the required level. However, as shown in Table 2.26, the load carrying capacity was evaluated through the loading test even though the safety factor and rating factor were calculated as 1.0 or higher in the all cases. The evaluated load carrying capacity also greatly exceeded the design live load. In this way, when the safety factor by structural analysis is satisfactory, it's judged that the effectiveness of the load carrying capacity evaluation through the loading test is not that high.

**Table 2.26 Status of load carrying capacity by loading tests in Korea**

| | Structure type | Condition inspection grade | Safety assessment grade | Design live load | *SF* | Evaluation of load carrying capacity | | | |
|---|---|---|---|---|---|---|---|---|---|
| | | | | | | *RF* | Capacity by *RF* | $K_s$ | Load carrying capacity |
| 1 | PSC-I | B | A | DB-18 | 1.94 | 2.79 | 50 | 1.058 | 52 |
| 2 | PSC-I | C | B | DB-24 | 1.41 | 1.55 | 37 | 0.818 | 30 |
| 3 | PSC-I | D | A | DB-18 | 1.41 | 1.86 | 33 | 1.337 | 44 |
| 4 | RC S | C | A | DB-18 | 1.20 | 1.50 | 27 | 1.228 | 33 |
| 5 | PSC-I | B | A | DB-18 | 1.77 | 2.99 | 53 | 1.228 | 65 |
| 6 | PSC-I | C | A | DB-18 | 1.26 | 1.94 | 34 | 0.905 | 30 |
| 7 | PSC-I | C | A | DB-18 | 1.25 | 1.57 | 28 | 1.030 | 28 |
| 8 | PSC-I | B | A | DB-24 | 3.19 | 2.07 | 49 | 1.349 | 66 |
| 9 | PSC-I | C | A | DB-24 | 1.74 | 3.25 | 78 | 0.530 | 41 |

In order to figure out the correlation between the safety factor by structural analysis and the performance of the loading test, additional domestic previous studied related to the loading test were analyzed. Hwang et al. collected the Full Safety Diagnosis reports (from 2003 to 2009) of 44 concrete bridges in Korea and analyzed the adequacy of carrying out the loading test according to the condition inspection grade, safety factor, and load carrying capacity. Most of the bridges are Class-I bridges with a design live load of DB-24, and consist of 36 PSC box girder bridges and 8 PSC-I bridges. As a result of the analysis, there were no specific trends in the condition inspection grades of the PSC girder and the safety factor and rating factor by structural calculation. This is because that the girder didn't suffer serious damage or deterioration to the extent that it affected the structural safety of the bridge. And as a result of comprehensively considering the condition inspection grade, safety factor, and rating factor, if the structural safety by calculation is below the required level, it's necessary to conduct a loading test because there is a risk of decrease in stiffness even if the safety in terms of strength is secured for the design live load. As such, when the condition of the existing bridges is good and it's evaluated that it shows sufficient structural safety through analysis, it's judged that the effect of the response adjustment factor through the loading test on the safety assessment of the bridge is negligible.

### 2.3.6 Cases of Bridge Evaluation in the Foreign Countries

It obtained and analyzed the evaluation reports of existing bridges in USA and France in order to understand how the bridge evaluation has been carried out in other countries. In the United States, Theodore Roosevelt Bridge located in Washington DC, completed in 1964 and has 13 spans (8 spans of steel girders, 2 spans of ramen, 2 spans of RC T, and one span of RC slab). For this bridge, a special evaluation performed to establish a strengthening plan in 2015 and a Routine Inspection performed in 2016. In the case of French bridges, special bridge evaluation performed on Paris bridge in Beauvais (completed in 1950) and Chavanon Bridge (completed in 2000).

A special inspection performed between 2014 and 2015 for Theodore R. Bridge to establish an expansion and renovation plan. The special inspection includes detailed visual inspection and non-destructive test and material testing (rebar GPR, concrete chloride ion test – 94 ea, cover thickness test, ultrasonic test of pin connection, concrete core test – 24 ea, tensile test of steel girder specimen – 4 ea). And a load rating also conducted by FEA method. On the other hand, in the Routine Inspection conducted in 2016, only the condition inspection through visual and physical inspection was performed. The load rating by rating factor was skipped because the result of condition inspection was evaluated as good condition. As such, in the United States, it was found that the detailed material tests and structure assessment is performed only when severe defects or deterioration is investigated in the regular condition inspection.

Special bridge evaluations conducted for Paris Bridge in Beauvais and Chavanon Bridge in France were also performed to investigate in problems found

in the regular bridge condition inspection. In the case of the former case, corrosion of reinforcing bars and severe cracks were found in the 2010 evaluation. So, safety assessment and loading test were performed to determine whether or not to replace the bridge. A new bridge (Figure 2.7) was built in 2012 because it was judged that the structural performance of the old bridge was unsatisfactory, such as excessive deflection was measured in the loading test compared to the structural calculation value.

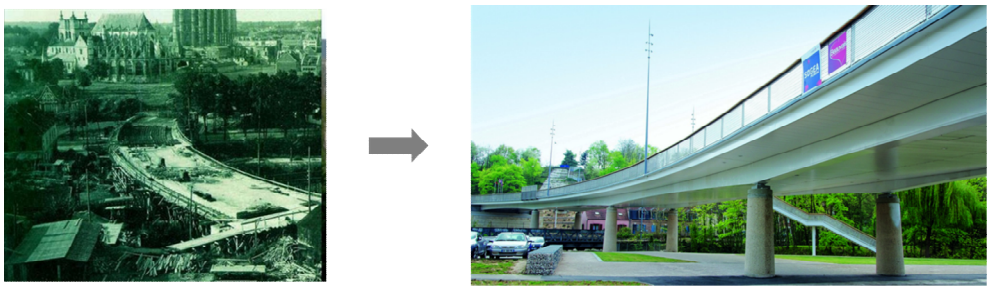

**Figure 2.7 Paris bridge in Beauvais reconstruction**

In the case of the latter bridge, serious delamination and rebar corrosion were investigated on the RC deck during regular inspection, and the degree of corrosion of rebars located inside the members was estimated in detail. The carbonation depth test was performed on the site and in the laboratory with the cores taken from the bridge.

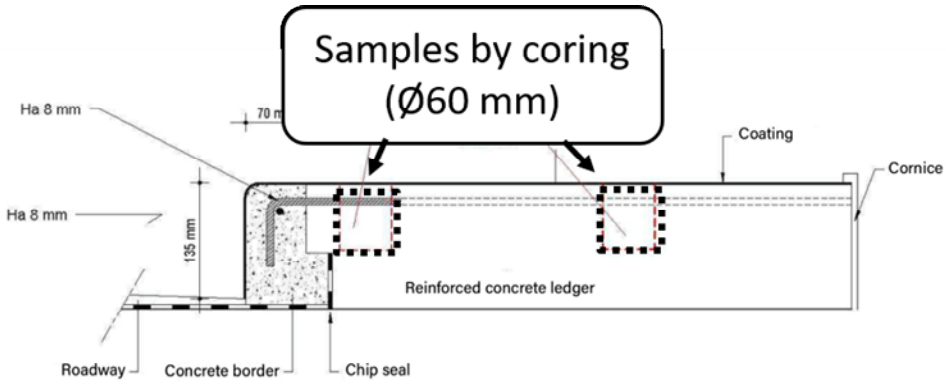


**Figure 2.8 Chavanon bridge coring**

As such, it could be seen that in foreign countries such as US and France, when severe defects and deterioration are found in regular condition inspection, additional material tests are performed to analyze the degree and cause of the problems and safety assessment to determine whether the structural performance could satisfy the required level or not.

# 3. Experiments with Decommissioned Bridge Members

## 3.1 Introduction

Since the enactment of the Act in 1995, regular bridge evaluations have been carried out for the existing concrete bridges in Korea. The Detailed Guideline consists of condition inspection through visual inspection and material testing, and safety assessment that evaluates the structural safety of bridges through structure analysis and loading tests. The current status and changes of bridges through exterior inspection and material testing are investigated and tracked. Then, the structural safety margin of the old bridge's member is assessed through calculations, and if necessary, the response of the bridge is measured through a loading test. However, it's difficult to know the actual strength of the existing concrete bridges with the current bridge evaluation methods. Since core sampling could damage the bridge structure system and reduce the structural performance, only a small amount of cores could be obtained within a limited range. Furthermore, getting specimens of main reinforcement bars and prestressing tendons, which have a dominant influence on the flexural strength of members, is almost impossible in reality. And, it’s impossible to experimentally evaluate the actual flexural strength of the bridge members during in-service unless the bridge is demolished or members are replaced. Therefore, the material strength of aged concrete bridges is estimated through visual inspection and NDT, and the flexural strength of members is calculated by applying design strength of material. The actual response of the bridge could be measured by performing the loading test, but it's impossible to

evaluate the structural performance in the ultimate state because the test is performed in the linear elastic range.

Several studies to evaluate the actual structure performance of the aged concrete bridges were conducted in foreign countries, such as in Japan and the United States. Oshiro and Hamada (1985) conducted material and flexural tests on the members of RC T-beam bridges that were significantly deteriorated by the hot and humid weather and seawater salinity in Okinawa, Japan. As a result, despite serious damage and deterioration in appearance, both the concrete core compressive strength and the rebar tensile strength were measured to be above the design strength. And the maximum strength measured by the structure experiments also was greater than the nominal flexural strength calculated by the design standards.

In the United States, studies were conducted to experimentally evaluate the actual structural performance of aged PSC girder members. Shenoay and Frantz (1991), Halsey and Miller (1996), Eder et al. (2005), and Pettigrew et al. (2016) conducted material and bending structure tests on members taken after the demolition of the PSC bridges, and figured out the actual material and member flexural strength through the experiments. The compressive strength of the concrete cores and the tensile strength of the prestressing steel were measured the design strength. And the member flexural strength was also confirmed in the structural experiments to have a strength greater than the nominal strength calculated with the design codes, and behavior similar to the bending behavior through structural analysis was shown in the experiment. In addition, it was confirmed that the effective presstress force of the prestressing steel estimated through the crack load measured in the test is similar to the effective prestress force

calculated by the American AASHTO design standard.

However, in Korea, there has been insufficient research to evaluate the actual structural performance of the existing concrete bridges by conducting experiments on the members obtained after the demolition of bridges. During the demolition process of Hongje overpass (1977), Seoul Metropolitan Government conducted material tests on 19 core specimens ($\phi 119$) with a L/D ratio of 1.0 or higher, and on 8ea of each D13 rebars, D16 rebars, D22 rebars and $\phi 7$ presstressing steels. The average core compressive strength was evaluated to be higher than the design compressive strength, but the material test strength of rebar and PS steel was measured to be under the design strength. However, the cause of the low strength of rebar and PS steel wasn't described in the report, and structure tests weren't performed on the member unit.

Therefore, this study conducted an empirical experiment targeting the naturally aged RC and PSC bridge members in Korea to find out the actual structural performance. Before the demolition of the bridges, the current level of bridge evaluations including of both condition inspection and structure assessment were performed. After demolition, all material and structural experiments were carried out at Hybrid Structural Testing Center in Yoing-in, and the test results were analyzed by securing the raw data. The test bridges consist of two RC bridges and three PSC bridges. The details of the bridge are shown in Table 3.1

**Table 3.1 Details of the test bridges**

| | Name | Built year (age) | Class | Grade | | Superstructure | | Design live load |
|---|---|---|---|---|---|---|---|---|
| | | | | Condi-tion | Safety | Type | Length | |
| 1 | Seoul Station overpass (ramp B) | 2000 (17 year) | I | B | - | RC Slab | 30 m (2 spans) | DB-24 |
| | | | | ('12 FSD) | | | | |
| 2 | Mojeon bridge | 1975 (44 year) | III | C | A | Ramen | 10.2 m | DB-18* |
| | | | | ('19 PA) | | | | |
| 3 | Guro overpass | 1977 (42 year) | II | C | A | PSC-I | 153 m (5 spans) | DB-18 |
| | | | | ('11 FSE) | | | | |
| 4 | Gunsung-gang overpass | 1975 (44 year) | III | C | C | PSC-I | 61 m (2 spans) | DB-18* |
| | | | | ('19 Type Ⅰ PA) | | | | |
| 5 | Sansung-Woochun bridge | 1975 (45 year) | III | C | A | PSC-I | 26.3 m | DB-18* |
| | | | | ('20 Type Ⅰ PA) | | | | |

*) After designed as DB-18, it was increased to DB-24 by strengthening. The tests were performed with members without the strengthening effects

### 3.1.1 Test Bridges

#### 3.1.1.1 Seoul Station Overpass (Ramp B)

The specifications and structure type of the Seoul Station Overpass is shown in Table 3.2. And the location and cross section of the bridge is in Figure 3.1 and 3.2.

**Table 3.2 Seoul Station Overpass (Ramp- B)**

| | | Contents |
|---|---|---|
| Bridge location | | - Sejong-daero, Jung-gu, Seoul |
| Built year | | - 1970 (Ramp-B: 2000) |
| Design live load | | - Main: DB-18, Ramp-B: DB-24 |
| Length | | - Ramp-B: L=113m (18+40+25+2@15) |
| Width | | - B=5.7m (One lane) |
| Superstructure type | | - STB 83m (18+40+25) + RC Slab 30m (2@15) |
| Bearings | | - Pot bearings (8EA), Elastomeric bearings (9EA) |
| Material | Concrete | - $f_{ck}$ = 27 MPa |
| | Rebar | - $f_y$ = 240 MPa |

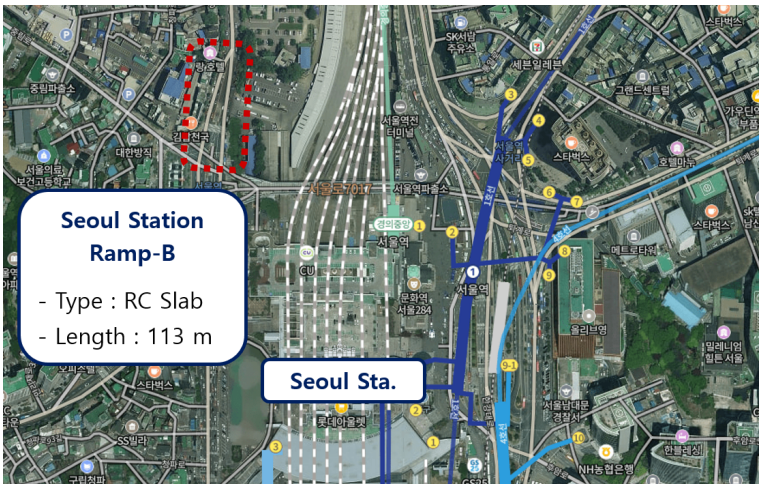


**Figure 3.1 Location of Seoul Sta. Ramp-B**

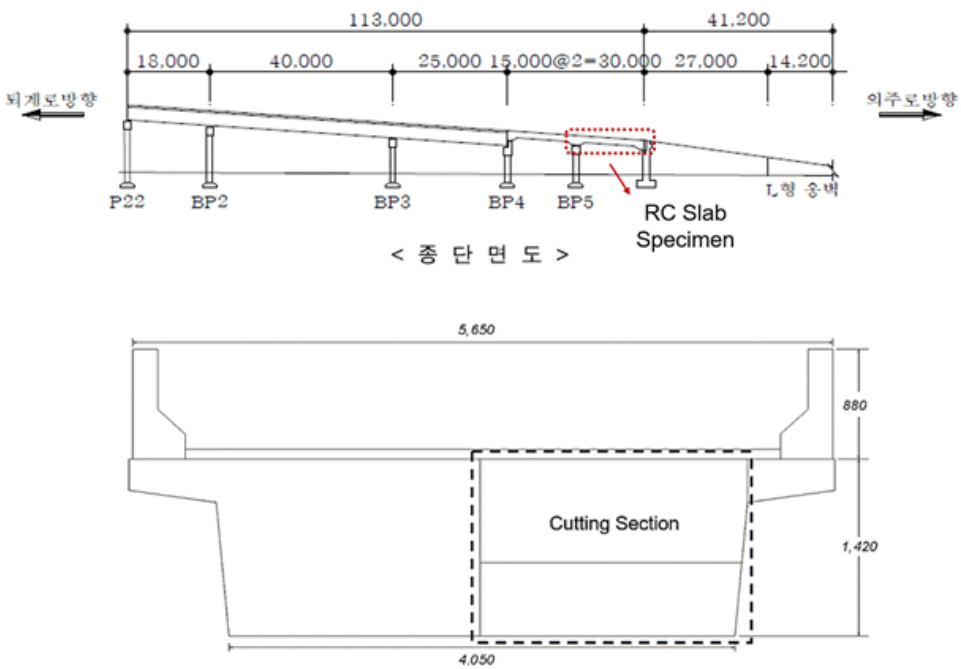


**Figure 3.2 Cross section of Seoul Sta. specimen**

### 3.1.1.2 Mojeon Bridge

The specifications and structure type of Mojeon bridge is shown in Table 3.3. And the location and cross section of the bridge is in Figure 3.3 and 3.4.

**Table 3.3 Mojeon Bridge**

| | | Contents |
|---|---|---|
| Bridge location | | - Donghae-daero, Gangdong-myeon, Gangneung-si |
| Built year | | - 1975 |
| Design live load | | - DB-18 |
| Length | | - L=10.2 m |
| Width | | - B=11.4 m (Two lanes) |
| Superstructure type | | - Ramen |
| Bearings | | - Abutment |
| Material | Concrete | - $f_{ck}$ = 27 MPa |
| | Rebar | - $f_y$ = 400 MPa |

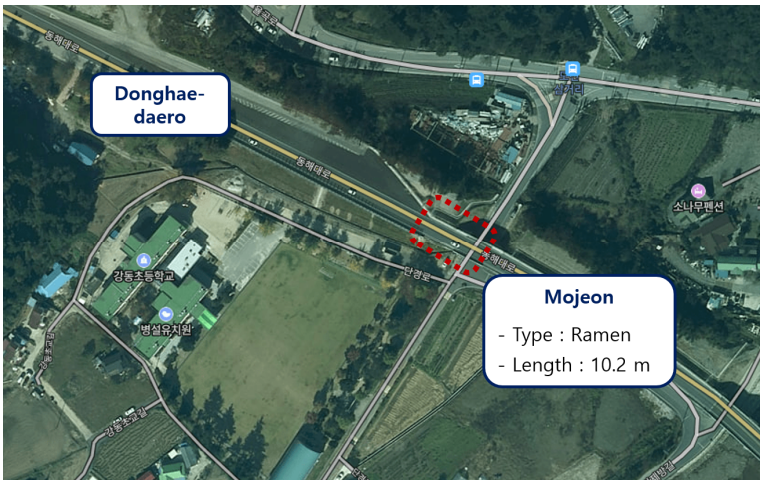


**Figure 3.3 Location of Mojeon bridge**

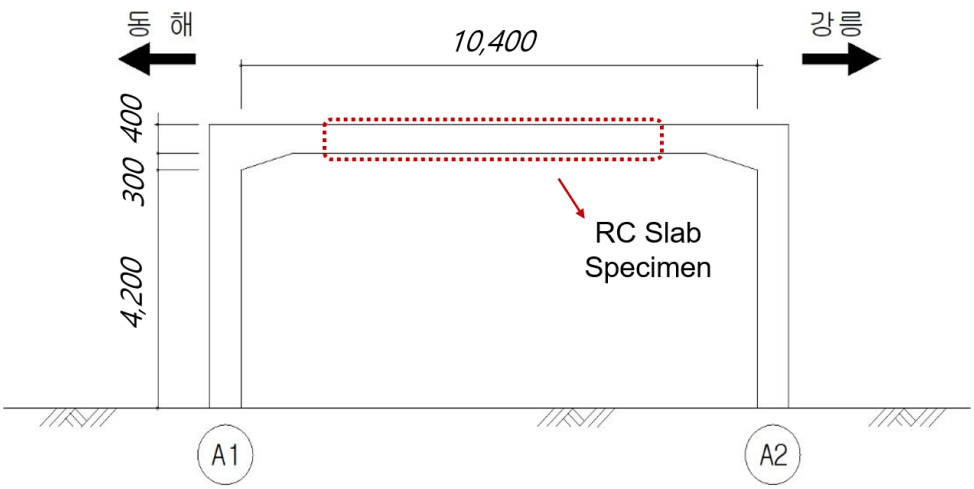


**Figure 3.4 Cross section of Mojeon bridge**

### 3.1.1.3 Guro Overpass

The specifications and structure type of Guro Overpass is shown in Table 3.4. And the location and cross section of the bridge is in Figure 3.5 and 3.6.

**Table 3.4 Guro Overpass**

| | | Contents |
|---|---|---|
| Bridge location | | - Nambusunhwan-ro, Guro-gu, Seoul |
| Built year | | - 1977 |
| Design live load | | - DB-18 |
| Length | | - L=154.2 m (5@30.85) |
| Width | | - B=18.5 m (five lanes) |
| Superstructure type | | - PSC-I |
| Bearings | | - Elastomeric bearings |
| Material | Concrete | - PSC-I girder: 35 MPa / RC deck: 24 MPa |
| | Rebar | - $f_y$ = 240 MPa |
| | PS | - $f_{py}$: 1,350 MPa, $f_{pu}$ = 1,560 MPa |

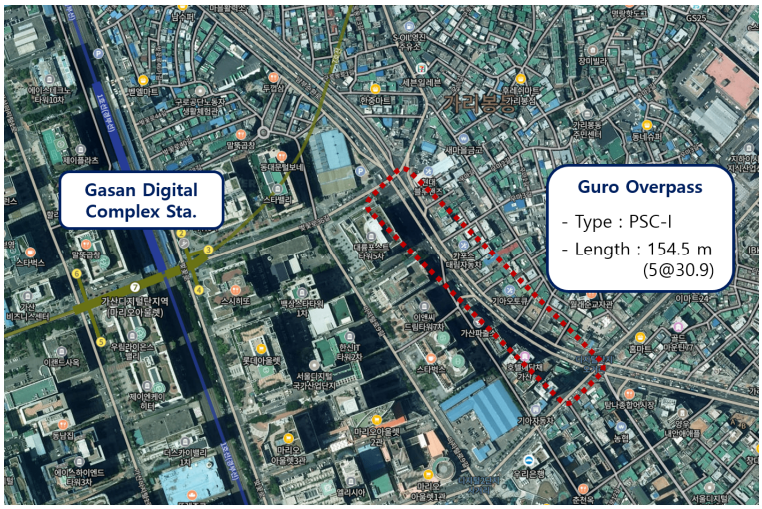


**Figure 3.5 Location of Guro Overpass**

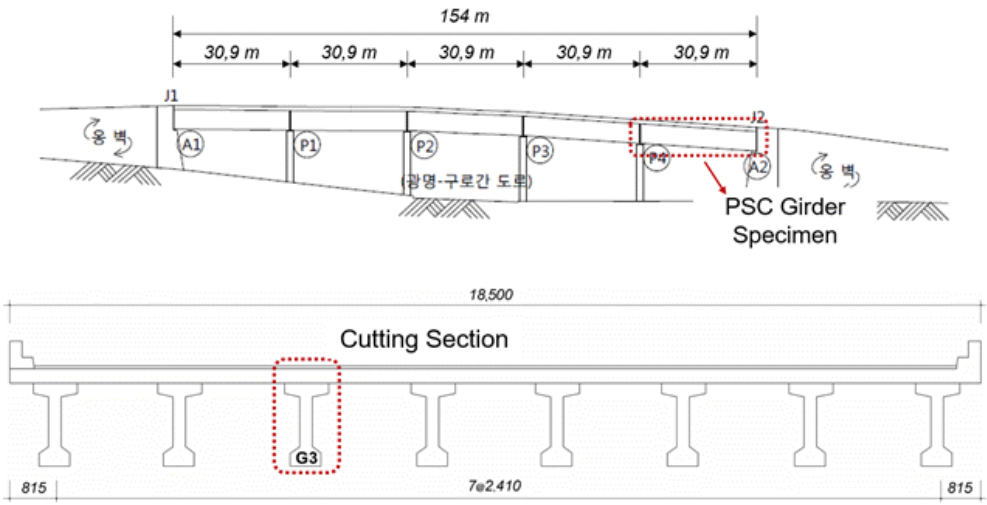


**Figure 3.6 Cross section of Guro Overpass**

### 3.1.1.4 Gunsunggang Bridge

The specifications and structure type of Gunsunggang bridge is shown in Table 3.5. And the location and cross section of the bridge is in Figure 3.7 and 3.8.

**Table 3.5 Gunsunggang bridge**

| | | Contents |
|---|---|---|
| Bridge location | | - Donghae-daero, Gangdong-myeon, Gangneung-si |
| Built year | | - 1975 |
| Design live load | | - DB-18 |
| Length | | - L=61.0 m (2@30.5) |
| Width | | - B=11.7 m (two lanes) |
| Superstructure type | | - PSC-I |
| Bearings | | - Elastomeric bearings |
| Material | Concrete | - PSC-I girder: 35 MPa / RC deck: 27 MPa |
| | Rebar | - $f_y$ = 400 MPa |
| | PS | - $f_{py}$: 1,350 MPa, $f_{pu}$ = 1,560 MPa |

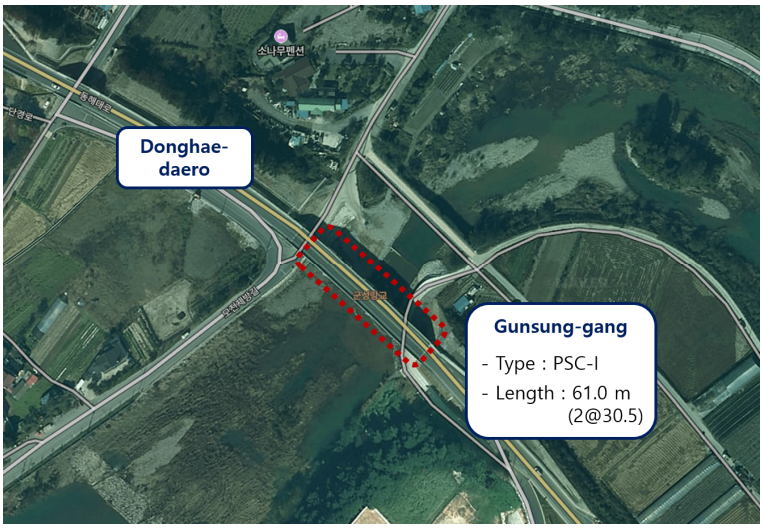


**Figure 3.7 Location of Gunsunggang bridge**

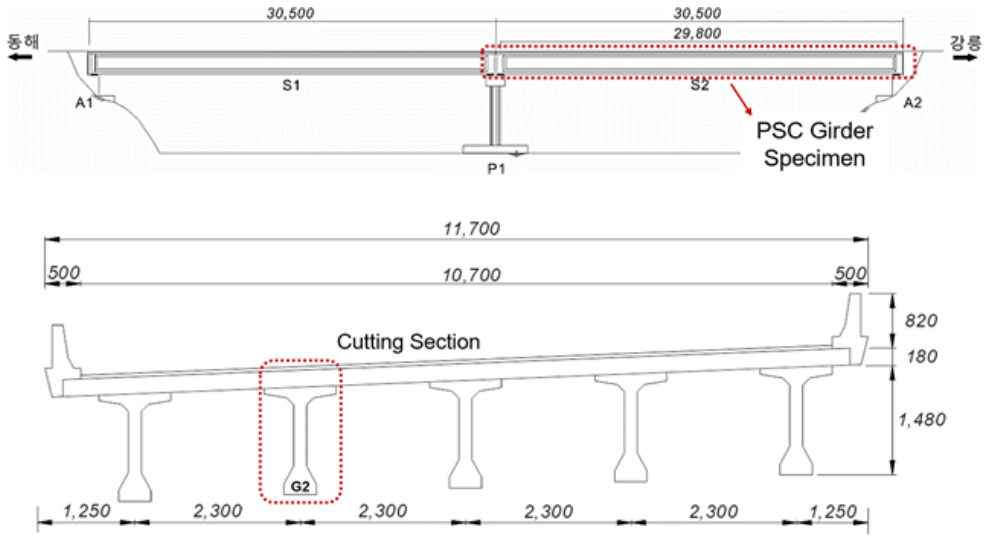


**Figure 3.8 Cross section of Gunsunggang bridge**

### 3.1.1.5 Sansung-Woochun Bridge

The specifications and structure type of Sansung-Woochun bridge is shown in Table 3.6. And the location and cross section of the bridge is in Figure 3.9 and 3.10.

**Table 3.6 Sansung-Woochun bridge**

| | | Contents |
|---|---|---|
| Bridge location | | - Yulgok-ro, Gangdong-myeon, Gangneung-si |
| Built year | | - 1975 |
| Design live load | | - DB-18 |
| Length | | - L=26.3 m |
| Width | | - B=11.8 m (two lanes) |
| Superstructure type | | - PSC-I |
| Bearings | | - Elastomeric bearings |
| Material | Concrete | - PSC-I girder: 35 MPa / RC deck: 24 MPa |
| | Rebar | - $f_y$ = 400 MPa |
| | PS | - $f_{py}$: 1,300 MPa, $f_{pu}$ = 1,500 MPa |

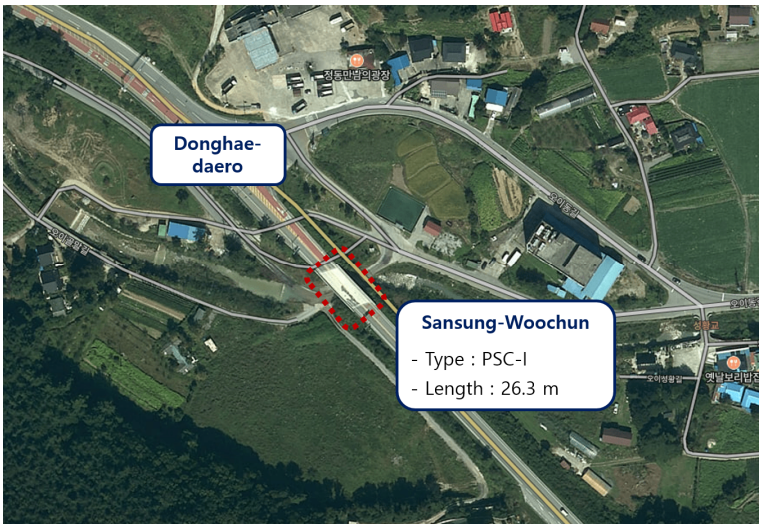


**Figure 3.9 Location of Sansung-Woochun**

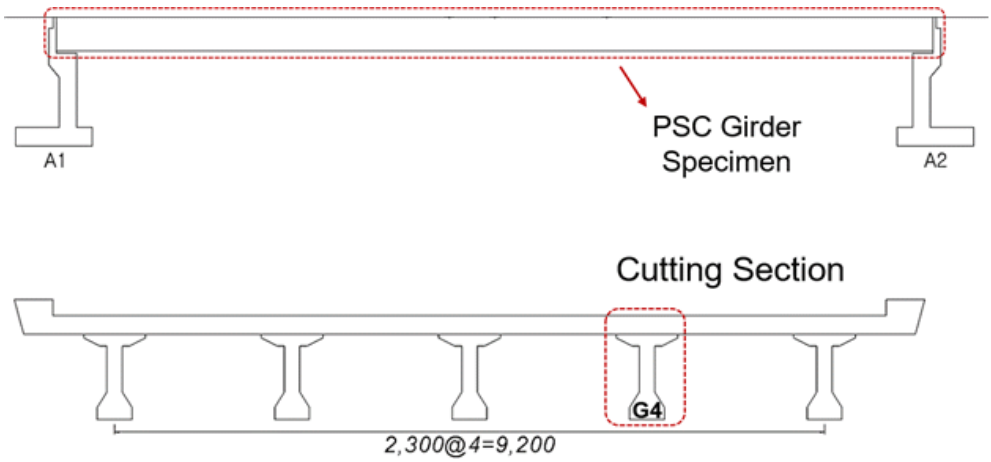


**Figure 3.10 Cross section of Sansung-Woochun**

### 3.1.2 History of Bridge Evaluation and Initial Status of Specimen

#### 3.1.2.1 Seoul Station Overpass (Ramp-B)

For Seoul Sta. Ramp B section, a limited bridge evaluation history could be found. As a result of checking the history, it was confirmed that both the girder and deck were in good condition

**Table 3.7 History of Seoul Station Overpass Ramp B**

| | Year | Condition Grade | Results of Condition Inspection |
|---|---|---|---|
| 1 | 2006 | B | - Deck: previous damage was repaired and no extra damage found<br>- Girder: local drainage failure |
| 2 | 2010 | B | - Deck: minor cracks in transverse direction<br>- Girder: good condition |

Visual inspection, and durability tests (carbonation depth and Chloride ion) were performed on the test specimen. As shown in Table 3.8, the condition of the Seoul Sta. specimen was in good condition.

**Table 3.8 Condition inspection of Seoul Sta. specimen**

| Types | Results | Grade |
|---|---|---|
| Visual inspection | - Local damage during specimen transportation<br>- 0.1~0.3 mm cracks by initial defects | b |
| Carbonation depth | - Remaining depth of carbonation is higher than 30 mm | a |
| Chloride ion | - Minor chloride ion was found, but corrosion possibility is low | a ~ b |

### 3.1.2.2 Mojeon Bridge

In the case of Mojeon, it was classified as an out-of-class facility before 2018, so regular bridge evaluation had not been performed. Therefore, there was no previous evaluation reports to track the condition and performance of the bridge.

Before demolition in 2019, a Class-I PA was performed to evaluate the condition and structural performance of the bridge. The condition safety performance and durability performance grades were evaluated as C and B as shown in Table 3.9. Even though, some defects and deterioration due to the increase in service year were found, it wasn't at a level that would impair the structural performance of the bridge and durability was confirmed to be not poor.

**Table 3.9 Results of PA of Mojeon bridge (2019)**

| Types | Results | Grade |
|---|---|---|
| Visual inspection | - Spalling and corrosion at strengthened steel plate | b |
| Carbonation depth | - Estimated year of remaining cover thickness to be carbonated as more than 30 years | a |
| Chloride ion | - Minor chloride ion was found, but corrosion possibility is low | b |

### 3.1.2.3 Guro Overpass

Guro overpass is a Class-II facility, so regular bridge evaluations had been performed after completion. As a result of reviewing the evaluation reports, the condition inspection grades were evaluated as B or C as shown in Table 10, and it was confirmed that there was little damage or deterioration that could impair structural safety of the bridge.

In the last FSA in 2017 before demolition, the condition inspection grade was rated as C. And the results and grade of span S5 which the decommissioned element specimen was obtained are described in Table 3.11. The grade of RC deck was ‘d’, because it has considerable crazing cracks on pavements and cracking and separation at the bottom side. However, the crazing cracks usually are considered as non-structural crack. And also, the exterior condition and durability of PSC girders, which are the main structural elements, were investigated as good status.

**Table 3.10 Results of condition inspection of Guro overpass S5 (2017)**

| Types | Results | Grade |
|---|---|---|
| Visual inspection (Deck) | - Upper side: crazing cracks on pavements<br>- Bottom side: cracks and separation | d |
| Visual inspection (Girder) | - Initial cracks due to shrinkage<br>- Efflorescence on girders due to leakage from cracked area of pavement | c |
| Carbonation depth (Girder) | - Remaining carbonation depth is more than 30 mm | a |

### 3.1.2.4 Gunsunggang Bridge

In the case of Gunsunggang bridge, it was classified as an out-of-class facility before 2018, so regular bridge evaluation had not been performed. Therefore, there was no previous evaluation reports to track the condition and performance of the bridge.

Before demolition in 2019, a Class-I PA was performed to evaluate the condition and structural performance of the bridge. The condition safety performance and durability performance grades of span 2, which the decommissioned element specimen was obtained were evaluated as ‘a’ ~ ‘c’ as shown in Table 3.12. So, it was confirmed that there was no severe durability deterioration which could impair the structural safety of the bridge elements. Even for RC deck, only minor drainage issue (lack of pipe length) and non-structural cracks on pavements were found.

**Table 3.11 Results of PA of Gunsunggang bridge S2 (2019)**

| Types | Results | Grade |
|---|---|---|
| Visual inspection (Deck) | - Short of drainage pipe length | c |
| Visual inspection (Girder) | - Exposed rebar at cantilever | a |
| Chloride ion (Deck) | - Estimated time is 20~30 years for the contents of chloride ion is 0.3~0.6 kg/m$^3$ | b |
| Carbonation depth (Girder) | - Remaining year for carbonation is more than 30 years | a |

### 3.1.2.5 Sansung-Woochun Bridge

Like the Mojeon and Gunsunggang bridge, the Sansung-Woochun bridge was an out-of-class facility before 2018. Thus, regular bridge evaluation had not been performed. Therefore, there was no previous evaluation reports to track the condition and performance of the bridge.

In the Class-I PA conduction in 2020, before the demolition of the bridge, the RC deck's condition safety and durability performance were evaluated as 'd'. The poor condition of the deck was judged due to low level of management at construction stage and long service year without regular maintenance system.

**Table 3.12 Results of PA of Sansung-Woochun bridge (2020)**

| Types | Results | Grade |
|---|---|---|
| Visual inspection (Deck) | - Crazing cracks from construction, efflorescence due to leakage, spalling due to replacement of expansion joints, damage and rebar exposure due to lack of cover thickness | d |
| Visual inspection (Girder) | - Cracking cracks at supports area, efflorescence due to leakage, containments inside strengthening plate | c |
| Carbonation depth | - Remaining year for carbonation is more than 30 years | a |
| Chloride ion (Deck) | - Significant contents of chloride ion (1.694 kg/m$^3$) | d |

### 3.1.3 Concluding Remarks

It was investigated that Seoul Sta. and Guro, where the regular evaluation had been performed, showed good condition and no severe deterioration with durability of the span where the specimen was located. In the case of Guro deck, the condition grade was 'd', but this is because a lot of defects and damage was investigated in the pavement. However, it was investigated that the efflorescence to the PSC girder, which is the main structure elements, has been gradually increasing.

Mojeon, Gunsunggang and Sansung-Woochun bridge had not been included in the maintenance system before 2018, so regular bridge evaluation was not performed after construction. Nevertheless, it was investigated that the main structural elements of Mojeon and Gunsunggang bridge showed good condition and durability at Performance Assessment. In the case of Sansung-Woochun bridge, a number of damage and deterioration were found on the RC deck, which resulted in efflorescence on the girders. The actual structural performance of these bridges was experimentally evaluated by conduction material and indoor structural tests on specimens of five bridges after demolition.

## 3.2 Material Tests

After the structure tests was performed on the members of the decommissioned bridges, specimens of concrete cores, reinforcement bars and PS steels were collected from the specimen members. With those specimen, material tests were performed in accordance with Korean Standard, hereinafter as KS, test regulations.

The concrete compressive strength was evaluated and compared by design compressive strength, NDT strength during service, NDT strength in laboratory with cores and core compressive strength. And the modulus of elasticity of concrete was compared with the value calculated by KHBDC and core strength from the compression tests. Finally, the tensile strength of reinforcing bars and PS wires was evaluated and compared by design strength and tensile test strength to investigated the actual material strength of the aged concrete bridges.

### 3.2.1 Concrete Compressive Strength

The actual concrete compressive strength of the existing concrete bridge members was evaluated by comparing and analyzing the results of tests performed on the specimens. The types of concrete compressive strength to be analyzed are as follows.

① Design compressive strength, $f_{ck}$

②-1 Rebound hardness test strength during service, $f_{rebound,s}$

②-2 Rebound hardness test strength after demolition (in laboratory), $f_{rebound,d}$

③-1 Ultrasonic test strength during service, $f_{US,s}$

③-2 Ultrasonic test strength after demolition (in laboratory), $f_{US,d}$

④ Core strength after demolition (in laboratory), $f_{cu}$

**Figure 3.11 Methods of concrete compressive strength evaluation**

For $f_{ck}$, the compressive strength in the design drawings or bridge evaluation report written in previous was referred to. The rebound hardness and ultrasonic test strength of on-site NDT was estimated from the same span as the decommissioned members in the evaluation reports. For the test members, the rebound and ultrasonic and core compression test were performed on the same core specimen. The location and quantity of concrete compressive strength test for each bridge is in Table 3.13.

**Table 3.13 Details of concrete compressive strength tests**

| Bridge | Member | $f_{rebound,s}$ | $f_{US,s}$ | $f_{rebound,d}$ | $f_{US,d}$ | $f_{cu}$ |
|---|---|---|---|---|---|---|
| Seoul Sta. (S5) | RC slab | 2 (bottom) | 2 (bottom) | 28 (inside) | 14 (inside) | 61 (inside) |
| Mojeon | RC deck | 3 (bottom) | - | 44 (inside) | 44 (inside) | 44 (inside) |
| Guro Overpass (S5) | RC deck | 1 (bottom) | - | 26 (inside) | 26 (inside) | 26 (inside) |
| | PSC girder | 2 (bottom) | - | 19 (surface) | 19 (surface) | 19 (surface) |
| Gunsunggang (S2) | RC deck | 1 (bottom) | 1 (bottom) | 37 (inside) | 37 (inside) | 37 (inside) |
| | PSC girder | 3 (bottom) | 3 (bottom) | 15 (surface) | 15 (surface) | 15 (surface) |
| Sansung-Woochun | RC deck | 4 (bottom) | 4 (bottom) | 39 (inside) | 39 (inside) | 39 (inside) |
| | PSC girder | 2 (bottom) | 2 (bottom) | 10 (surface) | 10 (surface) | 10 (surface) |

### 3.2.1.1 Core Compressive Strength

The compressive strength test according to KS F 2405 was performed on the core specimens collected from the members of the demolished bridges. The average compressive strength, $f_{cu}$ is in Table 3.14. In the case of RC deck, $f_{cu}$ is evaluated to be higher than $f_{ck}$ in every test bridges (1.30 ~ 2.14 times higher). In the chapter 3.1.2, defects and deterioration were usually found at RC elements. However, the concrete compressive strength measured in the core tests showed high enough strength.

Also in the PSC members, the average core strength is 1.06 ~ 1.38 times higher than the design strength, except for Gunsunggang bridge. As such, it was confirmed that the average compressive strength of the aged concrete bridges was higher than the design standard strength even after several decades of service life.

**Table 3.14 Results of average core compressive strength**

| | | Seoul Sta. | | Mojeon | | Guro overpass | | Gunsung-gang | | Sansung-Woochun | |
|---|---|---|---|---|---|---|---|---|---|---|---|
| | | MPa | /$f_{ck}$ | MPa | /$f_{ck}$ | MPa | /$f_{ck}$ | MPa | /$f_{ck}$ | MPa | /$f_{ck}$ |
| RC | $f_{ck}$ | 27 | - | 27 | - | 24 | - | 27 | - | 24 | - |
| | $f_{cu}$ | 36.6 | 1.36 | 35.2 | 1.30 | 42.5 | 1.77 | 52.2 | 1.93 | 51.4 | 2.14 |
| PSC | $f_{ck}$ | - | - | - | - | 35 | - | 35 | - | 35 | - |
| | $f_{cu}$ | - | - | - | - | 48.3 | 1.38 | 33.1 | 0.95 | 37.1 | 1.06 |

It was confirmed in Chapter 2 that the evaluation guidelines of US, Canada and UK present the statistically equivalent strength of concrete core when the core compressive strength is applied to the structural calculation. This is because, in reality, the number of cores that could be collected for the existing concrete bridges is limited, whereas the statistical dispersion of core strength data increases as the service age of the concrete increases (Bartlett and MacGregor, 1995). Also this tendency could be checked by comparing the statistical data of the core collected from the members of demolished bridge and core at the age of 28 days in Korea as shown in Table 3.15. Therefore, it's stipulated to apply the corrected compressive strength when calculating the member strength of the existing concrete bridge because the overestimated concrete strength could result in the overestimated member strength.

**Table 3.15 Core statistical strength data of 28 days and old bridges**

| $f_{ck}$ | 28 days Cores | | Cores from Old Bridges | | | |
|---|---|---|---|---|---|---|
| | $\mu_{28}$ | $\sigma_{28}$ | Name | $\mu_{old}$ | $\sigma_{old}$ | $\sigma_{old}/\sigma_{28}$ |
| 24 | 28.7 | 1.8 | Guro Overpass | 42.5 | 10.1 | 5.6 |
| | | | Sansung-Woochun | 51.4 | 15.4 | 8.6 |
| 35 | 42.0 | 2.4 | Guro Overpass | 48.3 | 6.4 | 2.7 |
| | | | Gunsung-gang | 33.1 | 5.4 | 2.3 |
| | | | Sansung-Woochun | 37.1 | 5.1 | 2.1 |

However, there has been no related articles in the Korean Detailed Guideline, and the existing concrete structure safety evaluation criteria of KDS 14 29 stipulates that the evaluation input value of concrete core compressive strength (defined as evaluation compressive strength) uses the lower limit value according to Equation 3.1.

$$O_{lower} = \overline{O} - \sqrt{(K \cdot s_c)^2 + (Z \cdot s_a)^2} \tag{3.1}$$

where, $O_{lower}$ is a lower limit of core compressive strength, $\overline{O}$ is an average compressive strength from core compression tests, $s_c$ is a standard deviation of compression test data, $s_a$ is a factor related to strength difference with member inside and surface, $K$ and $Z$ is factors determined by the number of core specimen and confidence interval by Table 3.16)

**Table 3.16 Concrete core compressive strength factor in KDS 14 29**

| n | *K* | Z | Notes |
|---|---|---|---|
| 3 | 4.26 | 1.28 | - For 'importance structure', confidence interval =90 %<br>(Confidence interval of $f_{ck}$ in KDS 24 14 21 =95%) |
| 5 | 2.74 | | |
| 10 | 2.06 | | |
| 30 | 1.66 | | |

According to the Equation 3.1, the evaluation core compressive strength ($f_c^{'}$) is same as Table 3.17. It was confirmed that the modified strength of the core of RC members was also higher than the design compressive strength. The core

compressive strength data of the Mojeon bridge failed the normality check at the 90% confidence interval, so the data is statistically useless. On the other hand, in the case of the cores from the PSC girder of Gunsunggang and Sansung-Woochun bridges, the modified strength was evaluated to be less than $f_{ck}$. The effect of the low compressive strength was analyzed in detail in the Chapter 3.3.

**Table 3.17 Average and modified core compressive strength**

| | | Seoul Sta. | | Mojeon | | Guro Overpass | | Gunsung-gang | | Sansung-Woochun | |
|---|---|---|---|---|---|---|---|---|---|---|---|
| | | MPa | / $f_{ck}$ | MPa | / $f_{ck}$ | MPa | / $f_{ck}$ | MPa | / $f_{ck}$ | MPa | / $f_{ck}$ |
| RC | $f_{ck}$ | 27 | - | 27 | - | 24 | - | 27 | - | 24 | - |
| | $f_{cu}$ | 36.6 | 1.36 | 35.2 | 1.30 | 42.5 | 1.77 | 52.2 | 1.93 | 51.4 | 2.14 |
| | $f_c^{'}$ | 30.4 | 1.13 | 14.2 | 0.53 | 25.6 | 1.07 | 37.5 | 1.39 | 26.9 | 1.12 |
| PSC | $f_{ck}$ | - | - | - | - | 35 | - | 35 | - | 35 | - |
| | $f_{cu}$ | - | - | - | - | 48.3 | 1.38 | 33.1 | 0.95 | 37.1 | 1.06 |
| | $f_c^{'}$ | - | - | - | - | 36.8 | 1.05 | 22.1 | 0.63 | 26.5 | 0.76 |

### 3.2.1.2 Rebound Hardness Test

A rebound hardness test was performed according to KS F 2730 at the location where the core specimen of the decommissioned bridge member was to be taken. And the compressive strength was estimated by applying the three equations mainly used in the Korean concrete bridge evaluation reports. For RC members with a $f_{ck}$ of less than 35 MPa, the average value of the strength by the equations estimated by the AIJ (Equation 3.2) and JIMM (Equation 3.3) was applied. And in the case of $f_{ck}$ was 35 MPa or more for PSC members, the compressive strength was estimated by the formula of the MOST (Equation 3.4). In each equation, $R_0$ is the average value of the rebound hardness measured by the tests.

$$f_c = (7.3R_0 + 100) \times 0.098 \tag{3.2}$$

$$f_c = -18 + 1.27 \times R_0 \tag{3.3}$$

$$f_c = 1.52 \times R_0 - 11.28 \tag{3.4}$$

As a result of analyzing the results of the rebound hardness test performed on the RC member, the estimated strength in the rebound test during service state showed a similar or larger value to $f_{ck}$, the same tendency as $f_{cu}$. However, the estimated strength by test after demolition didn't show any specific tendency with the design strength and average core strength. It's judged that the rebound test data performed in large quantities over the entire range of the decommissioned bridge members are more meaningful in evaluating the accuracy of the compressive strength of aged concrete estimated by the rebound test rather than the results of test performed in a small amount in a limit range. In particular, even though the

core and rebound hardness test compressive strength were compared for the same core specimen, there was no specific trend, so it could be seen that the accuracy of the concrete compressive strength estimated by the current methods of rebound test is not reliable.

**Table 3.18 Results of rebound hardness test of RC members**

| | | Seoul Sta. | | Mojeon | | Guro Overpass | | Gunsung-gang | | Sansung-Woochun | |
|---|---|---|---|---|---|---|---|---|---|---|---|
| | | MPa | /① | MPa | /① | MPa | /① | | | MPa | /① |
| ① | $f_{ck}$ | 27 | - | 27 | - | 24 | - | 27 | - | 24 | - |
| ② | $f_{rebound,s}$ | 35.9 | 1.33 | 31.1 | 1.15 | 26.8 | 1.12 | 26.8 | 0.99 | 29.1 | 1.21 |
| ③ | $f_{rebound,d}$ | 29.2 | 1.08 | 20.5 | 0.76 | 29.2 | 1.22 | 21.5 | 0.80 | 19.7 | 0.82 |
| ④ | $f_{cu}$ | 36.6 | 1.36 | 35.2 | 1.30 | 42.5 | 1.77 | 52.2 | 1.93 | 51.4 | 2.14 |

As a result of analyzing the rebound hardness test data performed on the PSC girder specimen in Table 3.19, the average core strength and any specific tendency couldn't be confirmed with the compressive strength estimated by the rebound hardness test as with the RC member case.

**Table 3.19 Results of rebound hardness test of PSC members**

| | | Guro Overpass | | Gunsung-gang | | Sansung-Woochun | |
|---|---|---|---|---|---|---|---|
| | | MPa | /① | MPa | /① | MPa | /① |
| ① | $f_{ck}$ | 35 | 1.00 | 35 | 1.00 | 35 | 1.00 |
| ② | $f_{rebound,s}$ | 38.8 | 1.11 | 44.7 | 1.28 | 37.3 | 1.07 |
| ③ | $f_{rebound,d}$ | 46.9 | 1.34 | 29.3 | 0.84 | 26.5 | 0.75 |
| ④ | $f_{cu}$ | 48.3 | 1.38 | 33.1 | 0.95 | 37.1 | 1.06 |

### 3.2.1.3 Ultrasonic Test

The ultrasonic test was performed according to KS F 2731 on the core specimens collected from the members of the demolished bridge. And the compressive strength was estimated by applying the strength estimation formula, which is typically used in the Korean bridge evaluation reports. The average value of the strength by the estimation formulas of AJI (Equation 3.5) and JIMM (3.6) was applied. $V_d$ is an ultrasonic velocity measured in the test (m/s).

.

$$f_c = (215V_d - 620) \times 0.098 \tag{3.5}$$

$$f_c = (102V_d - 117) \times 0.098 \tag{3.6}$$

As a result of analyzing the results of the ultrasonic test performed on the RC member, the compressive strength ($f_{us,s}$) estimated in the test during service status showed a similar or larger value to $f_{ck}$, the same tendency as $f_{cu}$. However, $f_{US,d}$ by the ultrasonic test performed on the same core specimen didn't show any specific tendency with the design compressive strength and average core strength. It's judged that it's more meaningful to evaluate the accuracy of the compressive strength of aged concrete estimated by the ultrasonic method, which is a large amount of data in the entire range of the decommissioned bridge members, rather than the test results conducted during in-service status in a small amount in a limited range. In particular, even though the compressive strength estimated by the core compressive strength and ultrasonic strength was compared for the same core specimen, no specific relationship was shown.

**Table 3.20 Results of ultrasonic test of RC members**

| | | Seoul Sta. | | Mojeon | | Guro Overpass | | Gunsung-gang | | Sansung-Woochun | |
|---|---|---|---|---|---|---|---|---|---|---|---|
| | | MPa | MPa | /① | | | | MPa | /① | MPa | /① |
| ① | $f_{ck}$ | 27 | - | 27 | - | 24 | - | 27 | - | 24 | - |
| ② | $f_{us,s}$ | 31.3 | 1.16 | - | - | - | - | 29.7 | 1.10 | 30.5 | 1.27 |
| ③ | $f_{us,d}$ | 20.3 | 0.75 | 27.8 | 1.03 | 35.4 | 1.48 | 31.7 | 1.17 | 30.2 | 1.26 |
| ④ | $f_{cu}$ | 36.6 | 1.36 | 35.2 | 1.30 | 42.5 | 1.77 | 52.2 | 1.93 | 51.4 | 2.14 |

As a result of analyzing the ultrasonic test data performed on the PSC specimens as shown in Table 3.21, the compressive strength estimated by the ultrasonic method as in the RC member case shows the opposite tendency to the average core compressive strength data. Thus, it's judged that the estimated strength of ultrasonic method by the current method has low reliability.

**Table 3.21 Results of ultrasonic test of PSC members**

| | | Guro Overpass | | Gunsung-gang | | Sansung-Woochun | |
|---|---|---|---|---|---|---|---|
| | | MPa | /① | MPa | /① | MPa | /① |
| ① | $f_{ck}$ | 35 | - | 35 | - | 35 | - |
| ② | $f_{us,s}$ | - | - | 32.1 | 1.15 | 46.9 | 1.34 |
| ③ | $f_{us,d}$ | 34.0 | 0.97 | 23.4 | 0.67 | 23.8 | 0.68 |
| ④ | $f_{cu}$ | 48.3 | 1.38 | 33.1 | 0.95 | 37.1 | 1.06 |

### 3.2.2 Concrete Modulus of Elasticity

The calculated elastic modulus values were compared by applying the design compressive strength of concrete and the average core compressive strength to the modulus of elasticity equation (Equation 3.7) from KHBDC.

$$E_c = 8{,}500\sqrt[3]{f_{cu}} \quad (f_{cu} = f_{ck} + 8) \tag{3.7}$$

KDS 14 29 90, the design standard for concrete structures in Korea, stipulates that the average value of the elastic modulus measured by the cores collected is used to get the modulus of elasticity value. And in Appendix V of the KCI Model Code 2017, when the elastic modulus is not measured in the core compression test, the calculated value by applying the average core compressive strength is stipulated to be used.

As a result of comparing the modulus of elasticity of concrete as shown in Table 3.22, the value calculated by applying the average core strength was mostly larger than the modulus of elasticity by applying the design compressive strength. Therefore, it's judged that the modulus of elasticity calculated with the design compressive strength represents the modulus of elastic of the existing concrete bridges in terms of safety.

**Table 3.22 Results of concrete elastic of modulus**

| | | Seoul Sta. | | Mojeon | | Guro Overpass | | Gunsung-gang | | Sansung-Woochun | |
|---|---|---|---|---|---|---|---|---|---|---|---|
| | | $f_c$ | $E_c$ | $f_c$ | $E_c$ | $f_c$ | $E_c$ | $f_c$ | $E_c$ | $f_c$ | $E_c$ |
| RC member | Design (①) | 27 | 27,804 | 27 | 27,804 | 27 | 27,804 | 24 | 26,986 | 24 | 26,986 |
| | Core (②) | 36.6 | 28,221 | 35.2 | 27,857 | 52.2 | 31,767 | 42.5 | 29,663 | 51.4 | 31,604 |
| | ②/① | 1.36 | 1.02 | 1.30 | 1.00 | 1.93 | 1.14 | 1.77 | 1.10 | 2.14 | 1.17 |
| PSC member | Design (①) | - | - | - | - | 35 | 29,779 | 35 | 29,779 | 35 | 29,779 |
| | Core (②) | - | - | - | - | 33.1 | 27,292 | 48.3 | 30,955 | 37.1 | 28,349 |
| | ②/① | - | - | - | - | 0.95 | 1.02 | 1.38 | 1.04 | 1.06 | 0.95 |

### 3.2.3 Reinforcement bars and PS wires

The specimens of reinforcing bars and PS wires were obtained from the member of decommissioned bridges that had undergone the structural tests, and tensile tests were performed in accordance with KS B 0802. For example, the photo of the prestressing tendon and wire obtained from Guro Overpass PSC girder are in Figure 3.12 and Figure 3.13.

**Figure 3.12 Cross section of Guro Overpass tendons**

**Figure 3.13 PS wires of Guro Overpass**

As a results of the tensile test, both reinforcing bars and PS wires showed yield and tensile strength above the design strength. Thus, it figured out the actual strength of rebars and PS steels of the existing concrete bridges which had little sign of corrosion in condition inspection shows enough high strength.

**Table 3.23 Tensile test results of reinforcements and PS wires**

| | | Mojeon | | Guro Overpass | | Gunsunggang | | Sansung-Woochun | |
|---|---|---|---|---|---|---|---|---|---|
| | | D25 rebar | | Φ8 prestressing wire | | | | | |
| | | MPa | ②/① | MPa | ②/① | MPa | ②/① | MPa | ②/① |
| $f_{py}$ | design (①) | 400 | - | 1,350 | - | 1,350 | - | 1,300 | - |
| | test (②) | 425 | 1.07 | 1,407 | 1.04 | 1,412 | 1.05 | 1,533 | 1.18 |
| $f_{pu}$ | design (①) | - | - | 1,560 | - | 1,560 | - | 1,500 | - |
| | test (②) | 655 | - | 1,625 | 1.04 | 1,647 | 1.06 | 1,659 | 1.11 |
| $E_p$ | design (①) | 200,000 | - | 200,000 | - | 200,000 | - | 200,000 | - |
| | test (②) | 206,239 | 1.03 | 207,873 | 1.04 | 194,893 | 0.97 | 180,718 | 0.90 |

## 3.3 Structure Tests in Laboratory

### 3.3.1 Structural test specimens

The structural tests were conducted on the members obtained after demolition of RC and PSC bridges, and the actual structural performance of the aged concrete bridge members was experimentally evaluated. In the case of PSC bridges, the tests were conducted on composite members composed of post tensioned PSC girder and cast-in-place RC deck. In the case of Mojeon bridge, which is an Ramen bridge in service, structure test was performed on RC slab specimen collected by cutting a part of the deck. The outline of the structural tests is in Table 3.24.

**Table 3.24 Outline of structural tests**

| | Bridge | Member types | Test types | Test condition | Notes |
|---|---|---|---|---|---|
| 1 | Seoul Sta. | RC slab | - Flexural test | 3 points and deflection ctrl. | - |
| 2 | Mojeon | RC slab | - Flexural test | 3 points and deflection ctrl. | Ramen |
| 3 | Guro Overpass | PSC-I girder | - Flexural test | 4 points and deflection ctrl. | Post-tensioned |
| 4 | Gunsunggang | PSC-I girder | - Flexural test | 4 points and deflection ctrl. | Post-tensioned |
| 5 | Sansung-Woochun | PSC-I girder | - Flexural test | 3 points and deflection ctrl. | Post-tensioned |

The specifications of the specimens are in Figure 3.14 ~ 3.18. The dimension is the value of measurement on the decommissioned bridge members.

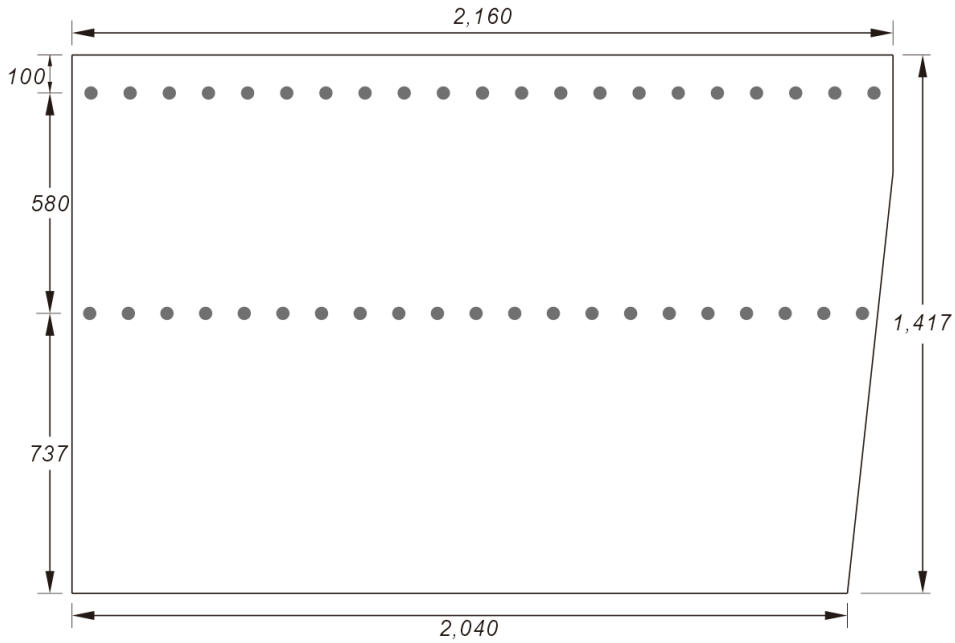


**Figure 3.14 Cross section of Seoul Station**

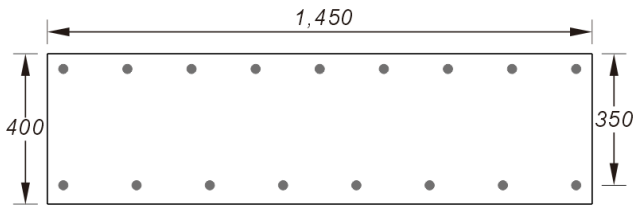


**Figure 3.15 Cross section of Mojeon**

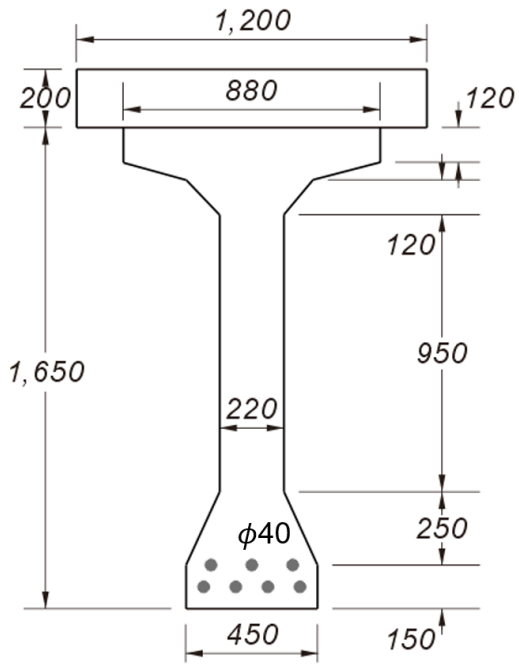


**Figure 3.16 Cross section of Guro Overpass**

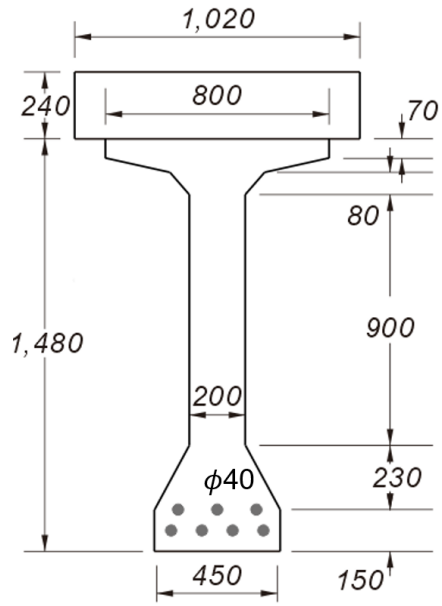


**Figure 3.17 Cross section of Gunsunggang**

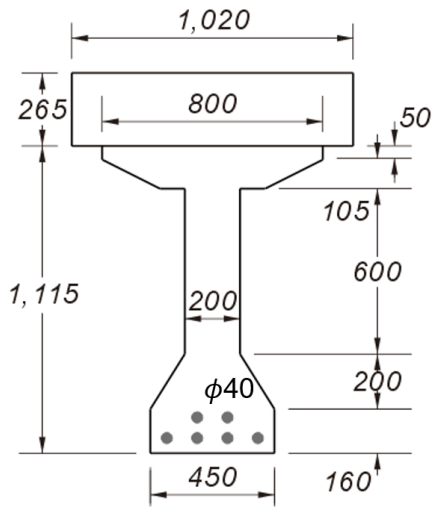


**Figure 3.18 Cross section of Sansung-Woochun**

For the tendon profile of the PSC test specimens, the design drawings for every bridge were absent. So the PSC-I beam manufacturing standard diagram of the ADB financing road program was referred to. After the structural test, the specimen was dismantled and the PS steels were checked. As a result, all three bridges consist of 12 ea ø8 steel wires. In the case of the RC slab specimen, D30 SD 240 rebar for Seoul Sta. and D25 SD400 for Mojeon were used as tensile reinforcing bars.

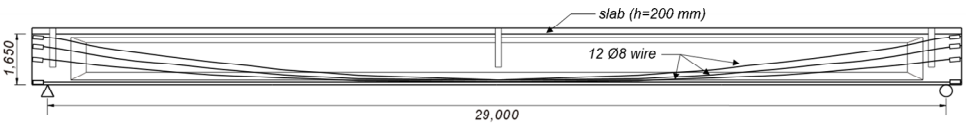


**Figure 3.19 Tendon profile of Guro Overpass**

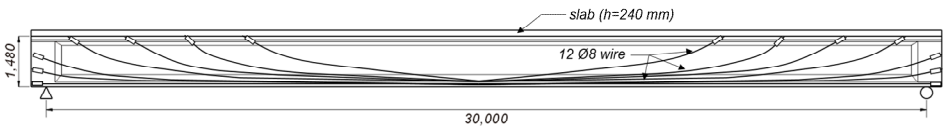


**Figure 3.20 Tendon profile of Gunsunggang**

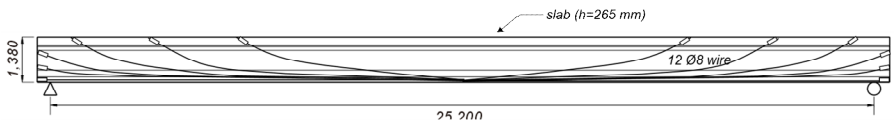


**Figure 3.21 Tendon profile of Sansung-Woochun**

### 3.3.2 Experimental Program

Structural tests were conducted on RC slab or PSC girder members after their removal from the bridge. The loading condition was performed with 3 or 4 points bending with displacement control. The support was set as a simple support condition in all experiments by using a roller-hinge support. For data acquisition, load, deflection at every 1/4 points of length, tensile strain of main rebar and PS wires located in the center of the specimen, and concrete strain by height of the specimen were measured. The load measured by the MTS actuator was used, and the deflection was measured by installing the LVDT equipment at 1/4, central, and 3/4 points of the span. The average value of two LVDTs installed in the direction perpendicular to the longitudinal axis was used for the deflection value at the center. The tensile strain of reinforcing bars and PS wires at the lower center. The tensile strain was measured by attaching strain gauges to the surface of the rebars or PS steels after chipping the underside covered concrete of the specimen. The concrete strain was measured by attaching concrete gauges to the top, side, and bottom of the specimen to measure the tensile and compressive strain of the concrete. The test condition and data acquisition of each bridge specimen are shown in Figure 3.22 ~ Figure 3.26.

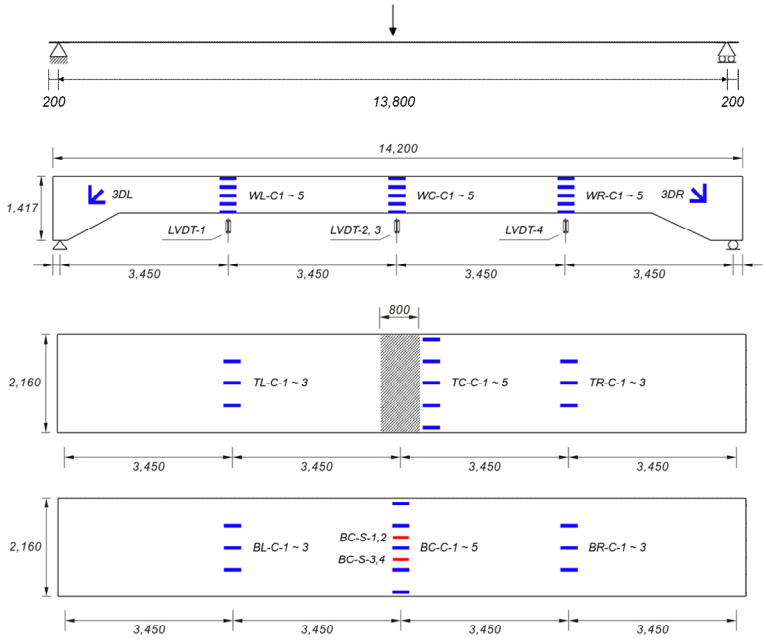


**Figure 3.22 Data acquisition of Seoul Sta. specimen**

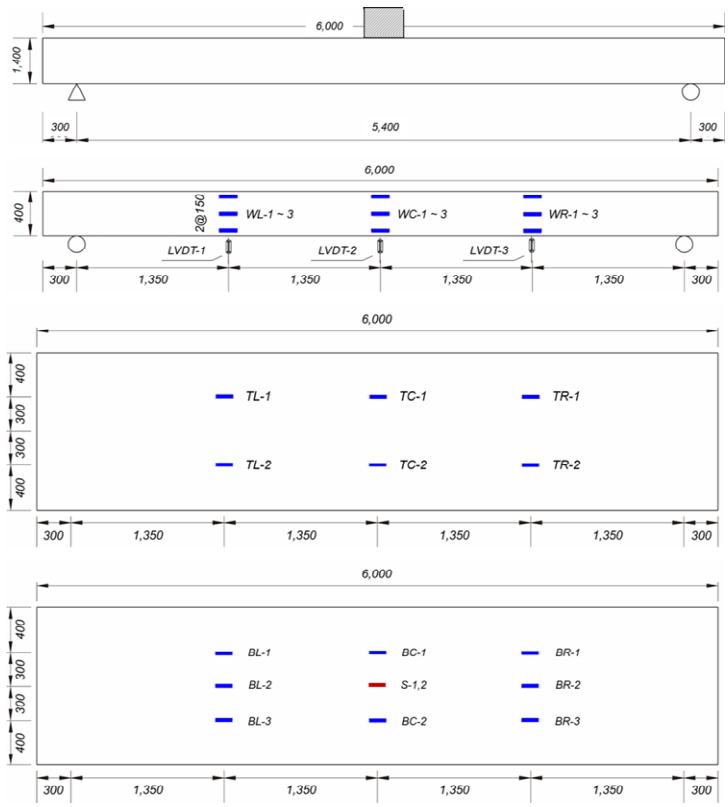


**Figure 3.23 Data acquisition of Mojeon specimen**

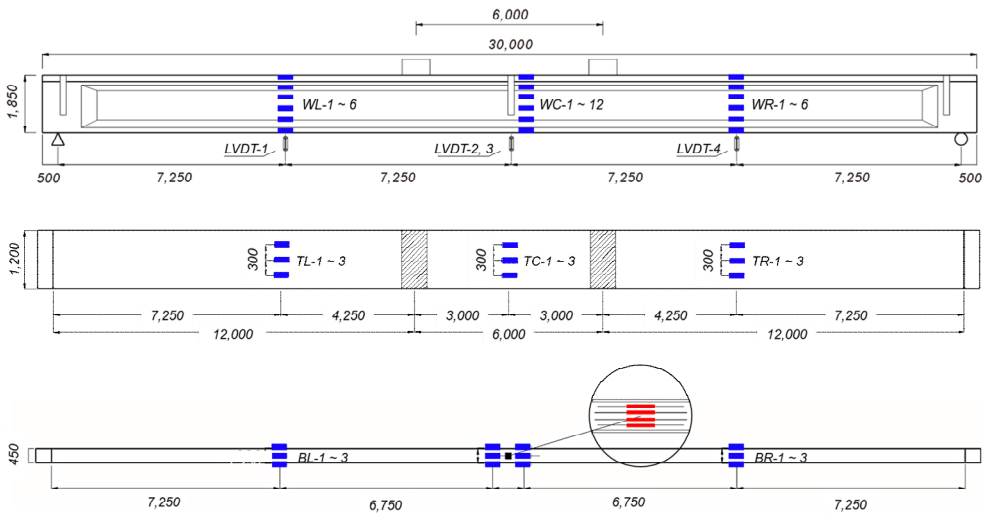


**Figure 3.24 Data acquisition of Guro Overpass specimen**

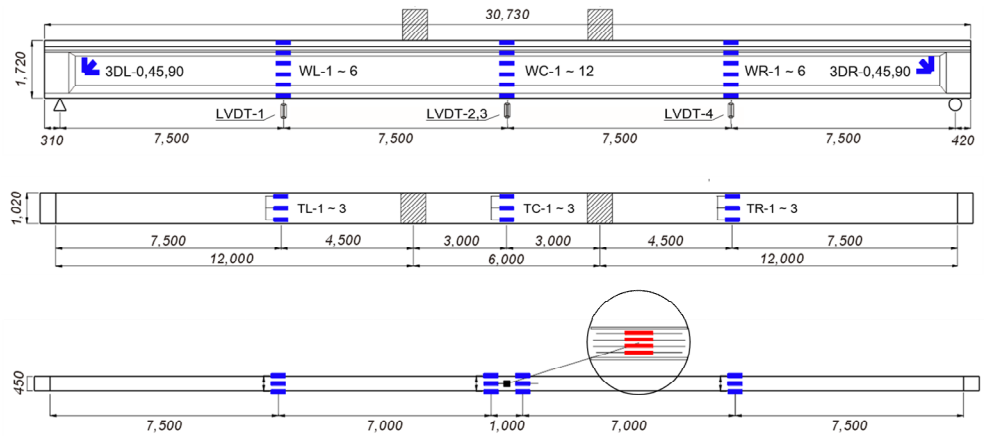


**Figure 3.25 Data acquisition of Gunsunggang specimen**

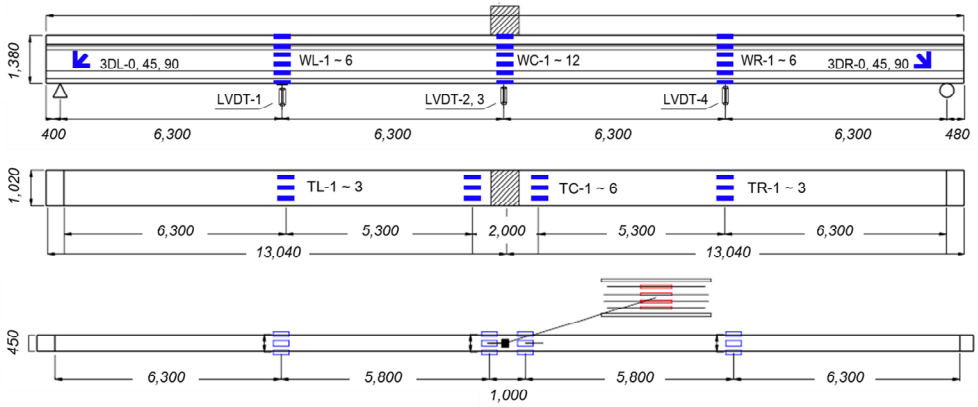


**Figure 3.26 Data acquisition of Sansung-Woochun specimen**

### 3.3.3 Analysis of Test Results

#### 3.3.3.1 Strain Compatibility Analysis

In order to predict the flexural behavior of each bridge specimen by structural experiment and to analyze the experimental results, structure analysis was performed by the strain compatibility method. The method is to carry out structural analysis according to the equilibrium equation and strain compatibility equation to figure out the member's flexural behavior.

For the concrete compression model, the stress-strain relationship (Figure 3.27) for nonlinear analysis in KDS 24 14 21 (2019) was applied. The concrete tension model used a bi-linear model considering the tension stiffening effect. And the modulus of rupture( $f_r$ ) was applied from the value of KHBDC.

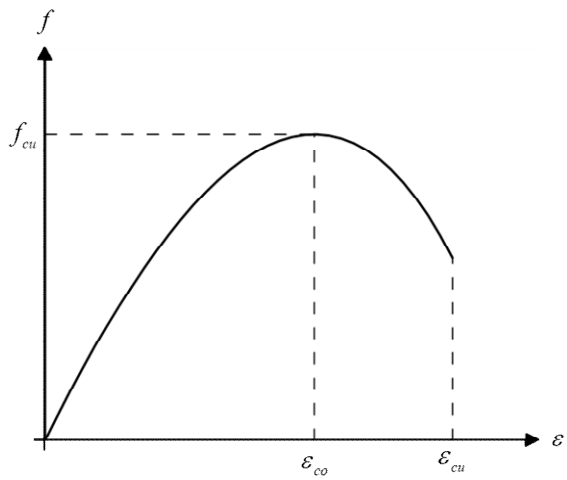


**Figure 3.27 Concrete compression stress-strain curve**

$$f_c = f_{cu}\left[\frac{k(\varepsilon_c / \varepsilon_{co}) - (\varepsilon_c / \varepsilon_{co})^2}{1 + (k-2)(\varepsilon_c / \varepsilon_{co})}\right] \tag{3.8}$$

where, $k = 1.1E_c\varepsilon_{co} / f_{cu}$, $\varepsilon_{co}$, $\varepsilon_{co}$ is the strain at the peak stress, $\varepsilon_{cu}$ is the ultimate limit strain in compression

**Table 3.25 Material properties of concrete**

| | Bridge | | $f_c$, MPa | | $f_r$, MPa | $E_c$, MPa | |
|---|---|---|---|---|---|---|---|
| | | | Design | Test | | Design | Test |
| 1 | Seoul Sta. | | 27 | 30.4 | 3.3 | 27,804 | 28,221 |
| 2 | Mojeon | | 27 | 35.2 | 3.3 | 27,804 | 27,857 |
| 3 | Guro Overpass | Deck | 24 | 25.6 | 3.1 | 26,986 | 29,663 |
| | | Girder | 35 | 36.8 | 3.7 | 29,779 | 30,955 |
| 4 | Gunsung-gang | Deck | 27 | 37.5 | 3.3 | 27,804 | 31,767 |
| | | Girder | 35 | 22.1 | 3.7 | 29,779 | 27,292 |
| 5 | Sansung-Woochun | Deck | 24 | 26.9 | 3.1 | 26,986 | 31,604 |
| | | Girder | 35 | 26.5 | 3.7 | 29,779 | 28,349 |

For the reinforcing bar model, the stress-strain relationship specified in KDS 24 14 21 (2019) was used. In the case of PS wire, the same S-S model was applied if the design material properties were applied. And when the material test properties were applied, the Ramberg-Osgood model, hereinafter the RO model (Equation 3.9) was applied. The A, B, and C coefficients of the RO model were determined through regression analysis using the tensile test data of the wires. For Sansung-Woochun bridge, only the strength data were measured in the tensile test, so the coefficient of the RO model couldn't be determined.

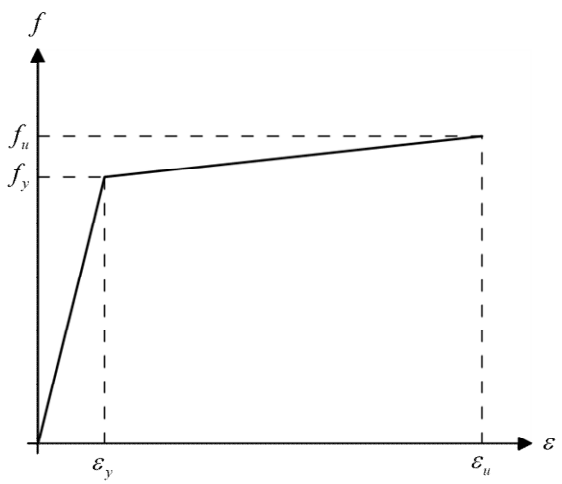


**Figure 3.28 Rebar and PS wire stress-strain curve**

$$f_c = E_p \varepsilon_{ps} \left[ A + \frac{1-A}{[1+(B\varepsilon_{ps})^C]^{1/C}} \right] \tag{3.9}$$

**Table 3.26 Material properties of rebar and PS wire**

| | Bridge | $f_y$, MPa | | $f_u$, MPa | | $E$, GPa | | Test RO coefficient |
|---|---|---|---|---|---|---|---|---|
| | | Design | Test | Design | Test | Design | Test | |
| 1 | Seoul Sta. | 240 | - | - | - | 200 | - | - |
| 2 | Mojeon | 400 | 425 | - | 655 | 200 | 206 | - |
| 3 | Guro Overpass | 1,350 | 1,407 | 1,560 | 1,625 | 200 | 208 | A: 0.020<br>B: 147<br>C: 6 |
| 4 | Gunsung-gang | 1,350 | 1,412 | 1,560 | 1,647 | 200 | 195 | A: 0.018<br>B: 139<br>C: 4 |
| 5 | Sansung-Woochun | 1,300 | 1,533 | 1,500 | 1,659 | 200 | 181 | - |

The effective prestress force of the PSC girder specimen was determined by referring to the prestressing loss of Korean design codes, KHBDC and KDS 24 21 21. Since there is no information related to the initial prestress force of each girder specimen, the jacking force of the ADB PSC-I drawing was referred to in the same way as the tendon profile.

In the KHBDC, the formula for calculating the prestress loss of wire over time when the tensile strength is 1,860 MPa is prescribed. However, since the PS wires of the specimen doesn't match this article, the simple calculation method of the total prestress loss prescribed in the KHBDC was applied. As could be seen in Table 3.27, the effective prestress force by the KHBDC is lower than the value by the KDS, the analysis was performed by applying the KHBDC value.

**Table 3.27 Prestress loss by design standards in Korea [MPa]**

| | Bridge | $f_{pi}$ , MPa | Anchorage slip | Friction | Elastic shortening | Creep | Shrinkage | Relaxation | $f_{pe}$ , MPa | $f_{pe} / f_{pu}$ |
|---|---|---|---|---|---|---|---|---|---|---|
| KHBDC 2010 | Guro Overpass | 1,040 | - | 83 | 230 MPa (Post-tensioned wire) | | | | 727 | **0.47** |
| | Gunsung-gang | 1,040 | - | 90 | | | | | 720 | **0.46** |
| | Sansung-Woochun | 1,019 | - | 73 | | | | | 716 | **0.48** |
| KDS 24 14 21 : 2019 | Guro Overpass | 1,040 | - | 79 | 53 | 121 | | | 789 | 0.51 |
| | Gunsung-gang | 1,040 | - | 79 | 57 | 138 | | | 768 | 0.49 |
| | Sansung-Woochun | 1,019 | - | 67 | 58 | 135 | | | 780 | 0.52 |

### 3.3.3.2 Seoul Station Overpass (Ramp-B)

The structural experiment of Seoul Sta. RC slab was stopped after confirming that the load didn't increase any more even when the displacement of the specimen increased, that is, the member yielded. The flexural crack pattern investigated when loading was stopped is as Figure 3.29. There were several vertical flexural cracks occurred at the center of the span.

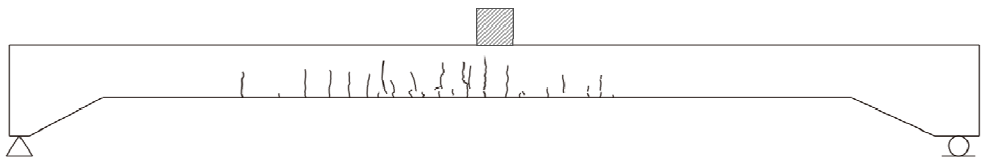

**Figure 3.29. Crack pattern of Seoul Sta. (when test termination)**

The load-displacement relationship of the slab specimen is in Figure 3.30. The flexural behavior similar to the analysis performed by applying the properties of design and material test was confirmed in the structural test. As the tensile test of rebar, which dominates the ultimate flexural strength of the member, wasn't performed, there was a difference in the maximum load.

As a result of confirming the load-strain relationship of the tensile rebar measured in the test, it was found that sufficient strain occurred from the yield of the rebar until the end of the experiment. It's confirmed that the tensile rebar of the specimen has ductility and bond performance above the required level.

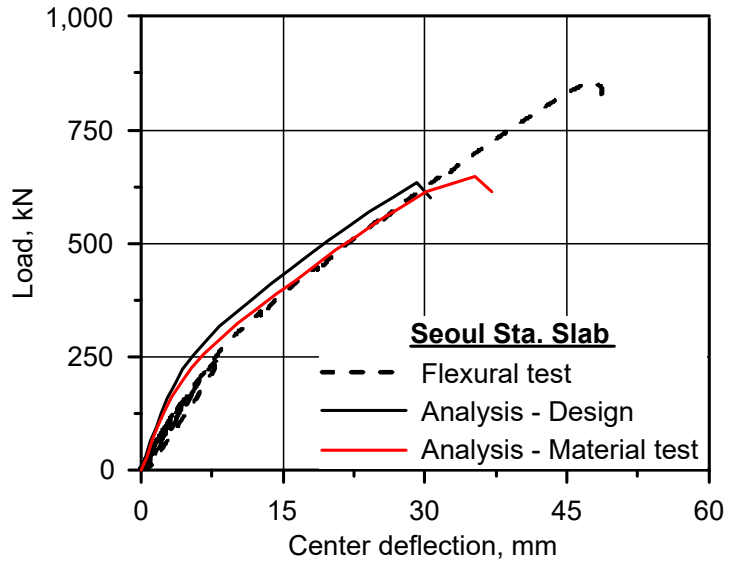


**Figure 3.30. Load-deflection of Seoul Sta.**

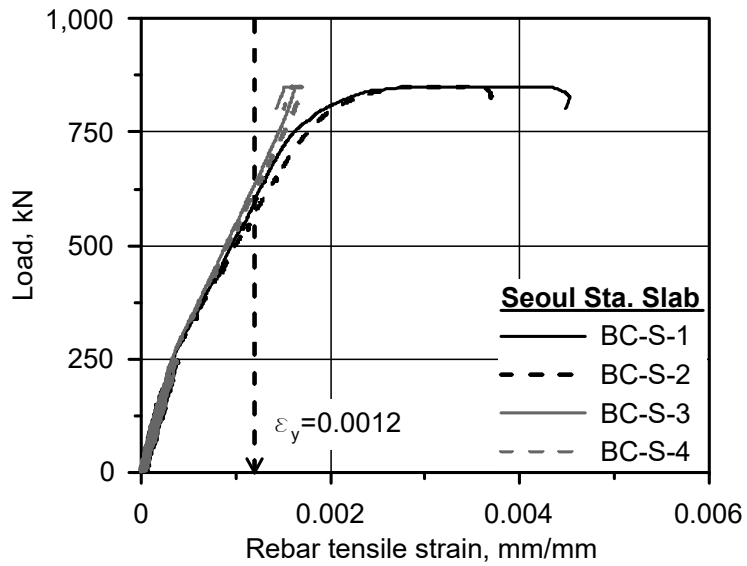


**Figure 3.31. Load-strain of Seoul Sta. rebar**

### 3.3.3.3 Mojeon Bridge

The structural test was performed on RC slab specimen obtained by cutting a part of the deck of Mojeon bridge, which was a ramen bridge in service. As a result, flexural failure occurred due to crushing of concrete in compressive area as Figure 3.33. It was found that flexural cracks occurred between the span length evenly at the time of destruction.

**Figure 3.32. Crushing of concrete of Mojeon**

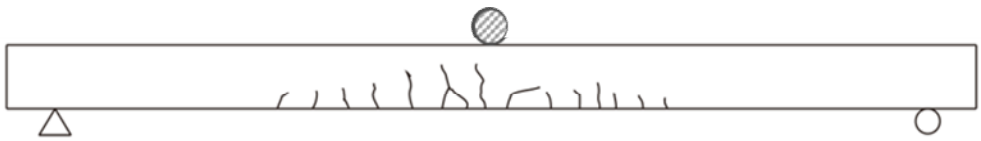

**Figure 3.33. Crack pattern of Mojeon (when failure)**

The load-deflection curve confirmed by the structural experiment is same as Figure 3.34. Similar to the Seoul Sta. specimen, flexural behavior similar to the analysis was confirmed in the experiment. Therefore, the flexure behavior of the old RC bridge's member could be predicted through structural analysis applying the design and material test properties.

The load-strain relationship of tensile reinforcements measured in the structure experiment was confirmed. The sufficient deformation occurred after the rebar yielding, and the ductility and bonding performance of the rebar were evaluated to be above the required design level.

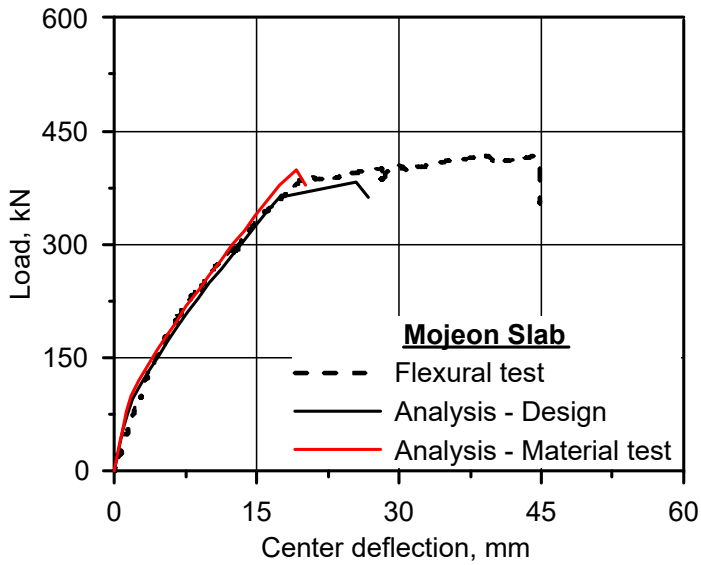


**Figure 3.34 Load-deflection of Mojeon**

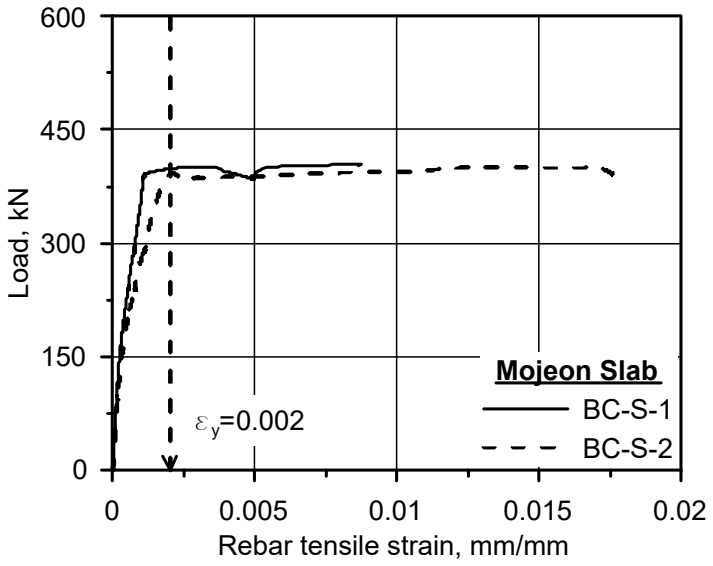


**Figure 3.35. Load-strain of Mojeon rebar**

### 3.3.3.4 Guro Overpass

After the start of loading, flexural cracks occurred and propagated in the center of the span, and diagonal cracks from the supports to the center occurred. After the occurrence of the diagonal crack, the crack (Figure 3.36) that existed before the structural test was conducted widened near the top of the central cross beam of the specimen, and the experiment was terminated. Since the crack wasn't found during the bridge evaluation in service, it's judged that it occurred during the demolition and transportation process. As the loading was stopped before the member yielding in this way, it wasn't possible to confirm the ultimate flexural strength of the specimen by the structure test.

**Figure 3.36. Existed crack at top near cross-beam**

Vertical flexural cracks occurred first in the maximum moment section of 4 points bending, and then diagonal cracks occurred outside the maximum bending moment area. As shown in Figure 3.37, it could be seen that the flexural cracks

occurred evenly in the center of the span.

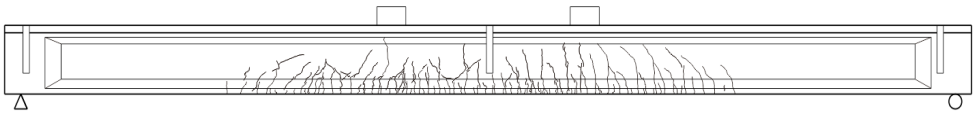

**Figure 3.37. Crack pattern of Guro Overpass (when termination)**

Load-displacement relationship caused by test loading after setting of the girder specimen is in Figure 3.38. The results of the analysis according to the strain compatibility and the different flexural behavior after crack initiation was confirmed in the experiment. A much low crack load occurred compared to the analysis, and the non-linear behavior started as the stiffness decreased after cracking at about 229 kN. The difference in crack load and stiffness of structural analysis and bending test was analyzed in detail later.

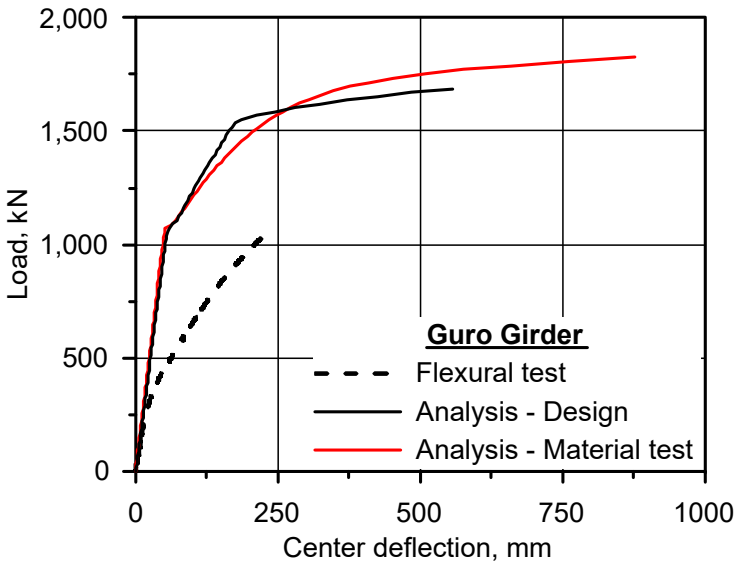


**Figure 3.38. Load-deflection of Guro Overpass**

The relationship between load and strain of PS wire measured in the experiment in Figure 3.39. Since the effective prestressing force and strain cause by the self-weight of the specimen have already occurred in the wire, this was considered.

The initial strain of the PS wires due to effective prestressing force and the dead load considering the prestress loss caused by the KHBDC was calculated, and the relationship between the strain and the load caused by the structural test loading was confirmed in this state. As a result, the strain of 0.00675 or more was confirmed as the design yield strain of the wires. However, it's difficult to say that the yield of the specimen occurred in the load-displacement curve of the girder. As a result of checking the load-displacement and PS wire load-strain relationship of the specimen, it was judged that it was necessary to check the effective prestressing force calculated by KHBDC, and this was analyzed in detail in Chapter 3.4.4.

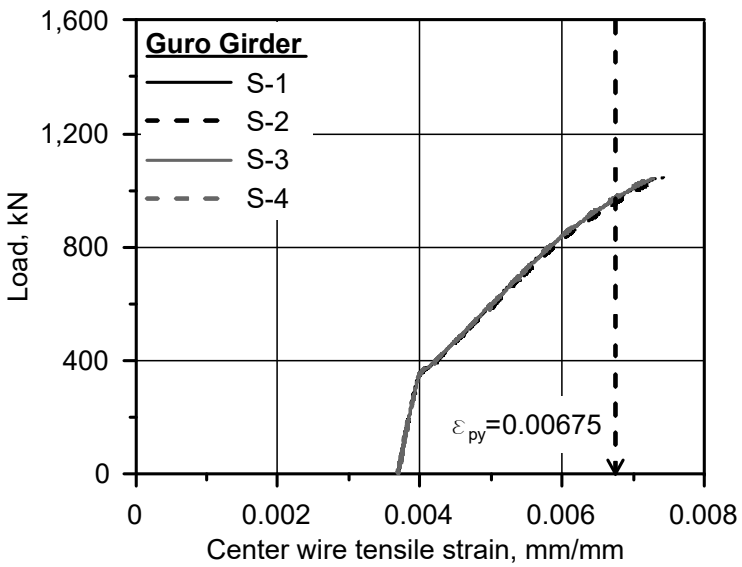


**Figure 3.39. Load-strain of Guro Overpass PS wire**

The composite behavior of the girder and the deck was evaluated with the strain data measured from the concrete strain gauge attached to the side of the specimen in the height direction. If the composite behavior of the specimen is properly performed, the correlation between the concrete strain of the girder and the deck would be linear. As shown in Figure 3.40, the concrete strain by load measured from the side of the girder and the deck showed a linear relationship before the occurrence of flexural cracking. Since Guro Overpass is designed as uncracked section, the intended composite behavior of the girder and the deck had been achieved in service.

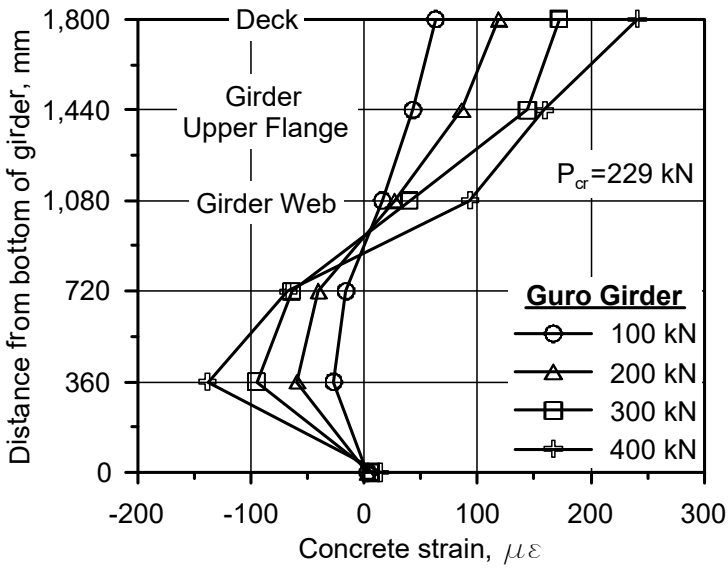


**Figure 3.40 Concrete strain by height of Guro Overpass**

### 3.3.3.5 Gunsunggang Bridge

After starting the loading in the indoor structural test, flexural cracks occurred and propagated at the center of the span, and diagonal cracks from the supports to the center occurred. After the load reached about 800 kN, the test was terminated for safety reason (concern about the specimen overturning). Therefore, as in the case of Guro Overpass, the ultimate flexural strength of Gunsunggang bridge's PSC girder specimen couldn't be confirmed experimentally.

In the range of the maximum bending moment between two actuators for loading, vertical flexural cracks occurred first, and diagonal crack occurred between the center of the span and the supports. As shown in Figure 3.41, it could be seen that the crack pattern confirmed at the end of the experiment was evenly distributed between the spans.

**Figure 3.41. Crack pattern of Gunsunggang (when termination)**

The load-displacement relationship of the specimen due to loading is Figure 3.42. At the beginning of loading, a linear elastic relationship was shown, but after cracking at about 100 kN, the slope decreased and non-linear behavior started. It could be seen that the crack load is much lower than the analysis result, as in the case of Guro Overpass.

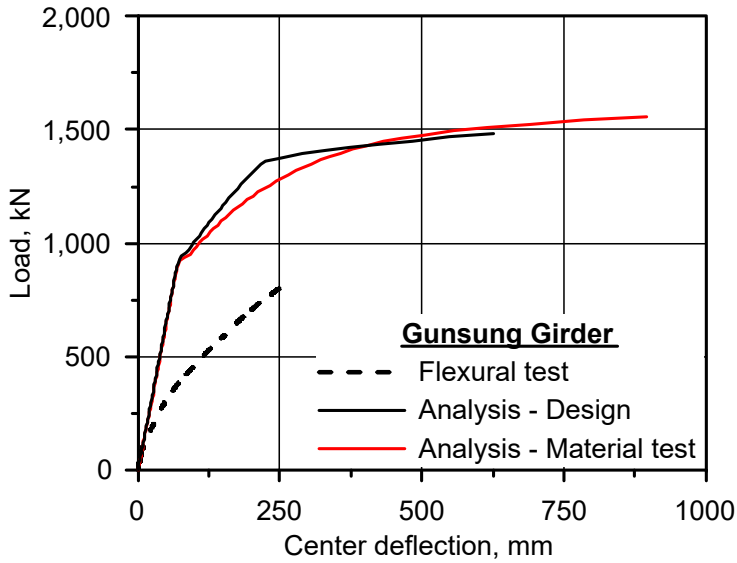


**Figure 3.42 Load-deflection of Gunsunggang**

As in the case of Guro Overpass, the effective prestress force and initial strain of the PS wires due to the dead load were calculated considering the prestress loss by KHBDC, and in this stage, the strain and load relationship of the PS steels due to structural test loading were confirmed. As a result, a strain of 0.0065 or more was measured at the yield strain of the PS steel. However, no yielding of the specimen occurred in the structural test, and the maximum load significantly lower than the nominal load calculated by KHBDC was evaluated in the test. Therefore, the strain of prestressing steel wire of the girder specimen was analyzed in detail later.

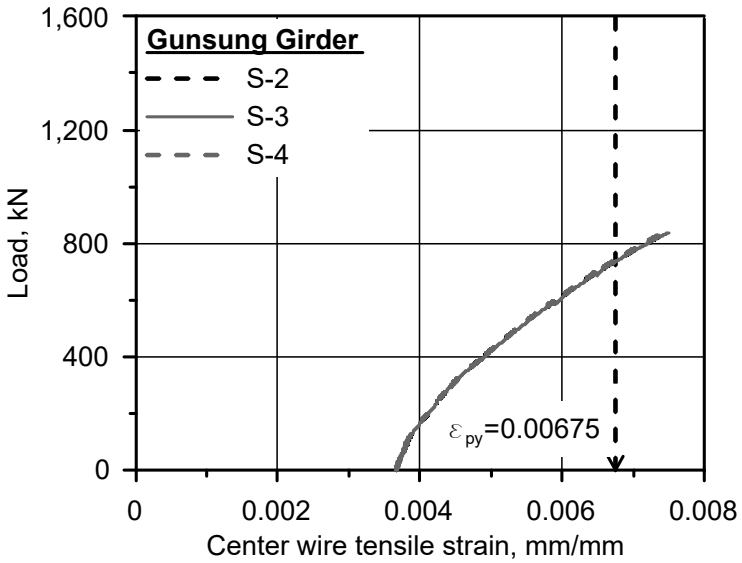


**Figure 3.43 Load-strain of Gunsunggang PS wire**

The composite behavior of the deck and the girder was evaluated with the strain data measured from the concrete strain gauge attached to the side of the specimen in the height direction. If the composite behavior of the Gunsunggang bridge specimen is performed properly, the correlation between the concrete strain between the deck and the girder would be linear. As could be seen, the concrete strain by load measured from the side of the girder and the deck showed a linear relationship before the occurrence of flexural cracking. Since the Gunsunggang bridge is an uncracked section in service like the Guro Overpass, it's judged that the intended composite behavior of the deck and the girder at the design stage was achieved under the service load condition.

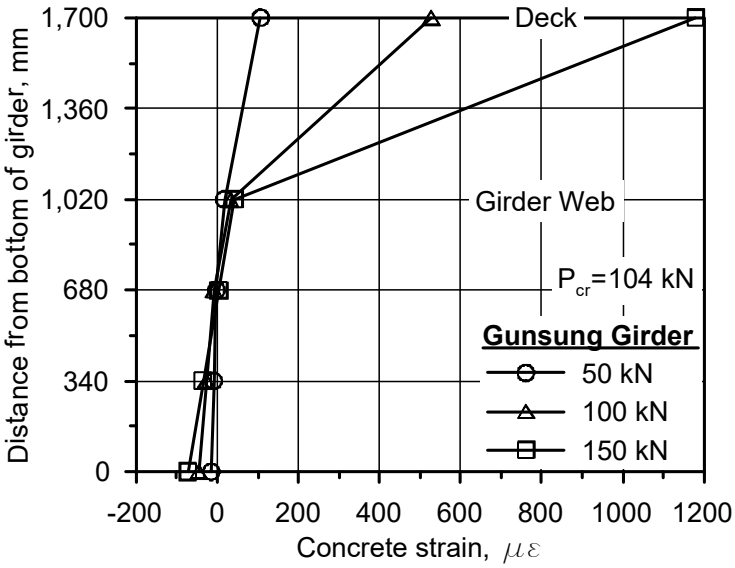


**Figure 3.44 Concrete strain by height of Gunsunggang**

### 3.3.3.6 Sansung-Woochun Bridge

In the structural test of the flexural member, even after the member yielding, the loading continued to cause flexure failure due to the crushing of the concrete deck (Figure 3.45). Therefore, it was possible to experimentally confirm the actual ultimate flexural strength of the member. If we check the crack pattern after the occurrence of flexural failure, the cracks occurred evenly distributed between the span as shown in Figure 3.46.

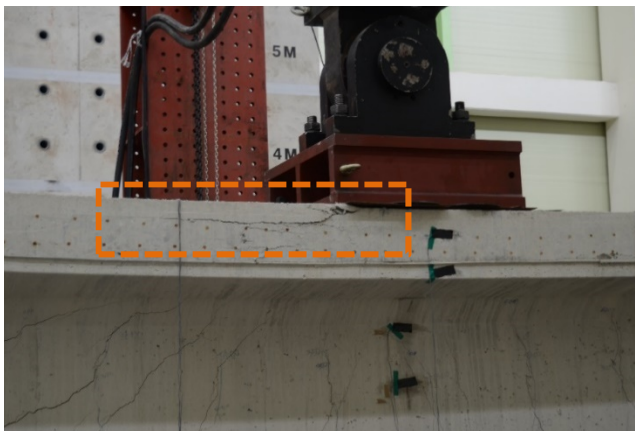


**Figure 3.45. Concrete crushing of deck of Sansung-Woochun**

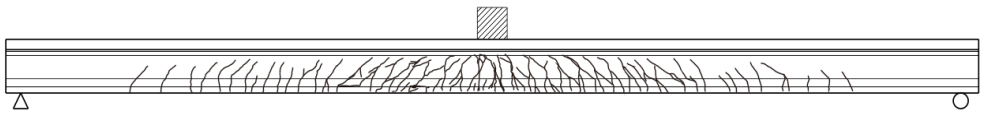

**Figure 3.46. Crack pattern of Sansung-Woochun (when failure)**

The load-displacement relationship of the specimen due to loading is Figure 3.47. At the beginning of loading, a linear elastic relationship was shown, but after cracking at about 171 kN, the slope decreased and non-linear behavior started. As with the previous two PSC girder specimens, it could be seen that the crack load is much lower than the analysis results.

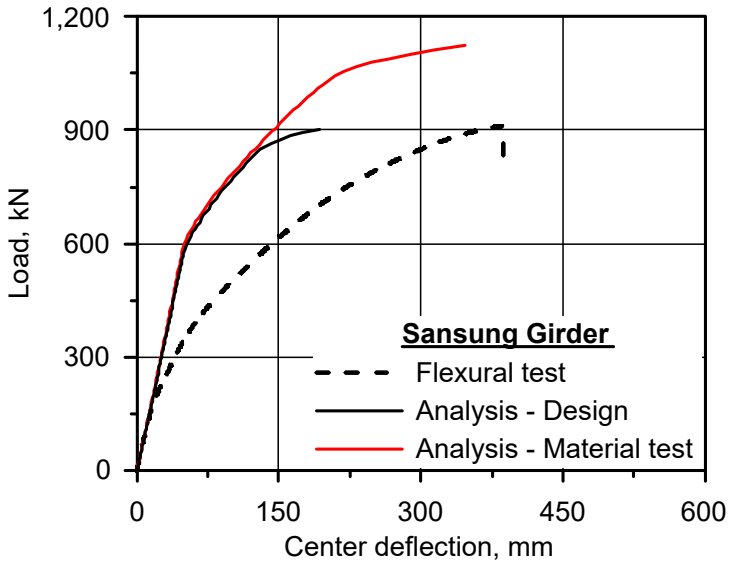


**Figure 3.47 Load-deflection of Sansung-Woochun**

The relationship between load and strain of PS steels by structural test loading was confirmed in Figure 3.48. As a result, a strain of 0.0065 or more was measured at the yield strain of PS steel wire. In the structural test, the PS wire of the test specimen of the bridge, which yielded was evaluated to have sufficient ductility and bonding performance

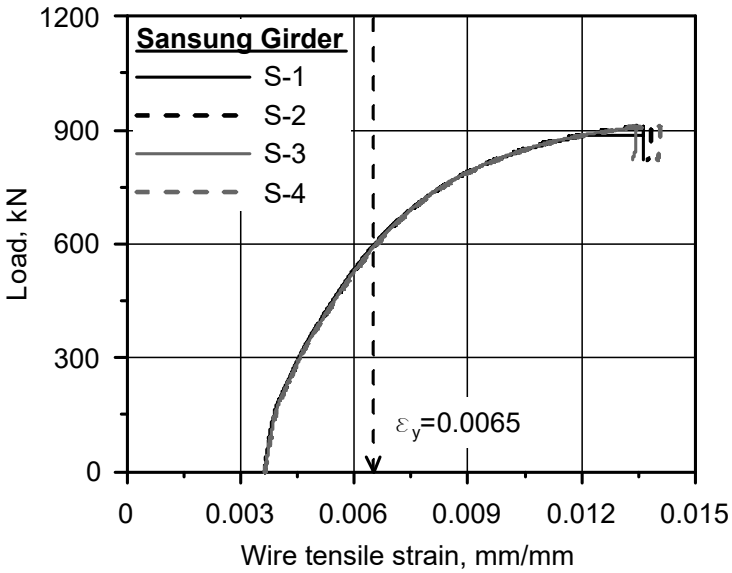


**Figure 3.48 Load-strain of Sansung-Woochun PS wire**

The composite behavior of the deck and the girder was evaluated with the strain data measured from the concrete strain gauge attached to the side of the test specimen in the height direction. If the composite behavior of the specimen of the bridge is performed properly, the correlation between the concrete strain between the deck and the girder would be linear. As could be seen in Figure 3.49, the concrete strain by loading measured from the side of the deck and the girder showed a linear relationship before occurrence of flexural cracking. Since the Sansung-Woochun bridge was designed as uncracked section, it's judged that the intended composite behavior of the deck and the girder has been achieved under the service load condition.

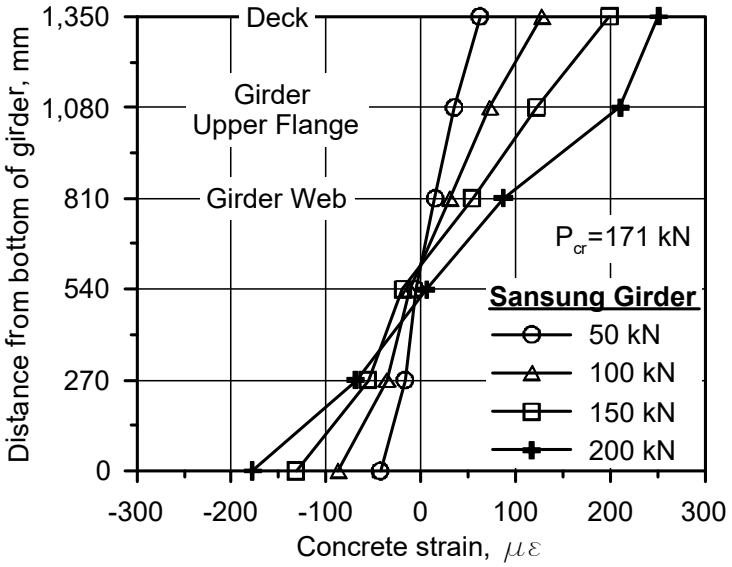


**Figure 3.49 Concrete strain by height of Sansung-Woochun**

### 3.3.3.7 Estimation of Effective Prestress Force of Bridges

Based on the strain compatibility analysis results, it was judged that the effective prestressing force of the PSC girder specimen for which the structural test was performed had a greater loss than the effective force according to the Korean design codes. Since the actual residual effective prestressing force of the girder specimen was not measured during the test process, the residual force of the PS wire was estimated in two ways. First, the effective prestressing force was estimated through the crack load of the bending test, and as the second method, the force was estimated through parametric analysis.

When a structural test is performed on the demolished PSC girder specimen, the concrete at the bottom of the girder is subjected to the following stress in Equation 3.10.

$$f_{bot} = -\frac{f_e A_p}{A_g} - \frac{f_e A_p e_g}{I_g} + \frac{M_{sw}}{I_g} y_g + \frac{M_{load}}{I_c} y_c \tag{3.10}$$

where, $f_e$ is the prestressing stress after allowance for all prestress loss (MPa), $A_p$ is the area of PS wire ($mm^2$), $A_g$ is the area of girder ($mm^2$), $e_g$ is the distance between centroid of girder and PS wire (mm), $I_g$ is the moment of inertia for girder ($mm^4$), $y_g$ is the distance from centroid axis of girder to bottom (mm), $M_{sw}$ is the flexural moment due to self-weight (kN-m), $M_{load}$ is the flexural moment due to loading in the test (kN-m), $I_c$ is the moment of inertia for composite section ($mm^4$), $y_c$ is the distance from centroid axis of composite section to bottom (mm)

As the test loading continues, the $M_{load}$ gradually increases, and when the tensile stress of concrete ($f_{bot}$) at bottom of the girder is higher than the modulus of rupture ($f_r$), flexural cracks occur. Therefore, the $f_e$ at the moment when $f_{bot}$ and $f_r$ become the same could be regarded as the effective prestressing force remaining in the PS tendon. However, in this experiment, since the concrete modulus of rupture was not measured in the material test, it was assumed to be the value ( $f_r = 0.63\sqrt{f_{ck}}$ ) according to the design code, KCI 2012.

The second method is to set the effective prestressing force as a parameter to reduce the effective tensile force while estimating the effective prestress force, which shows a load-displacement relation similar to that of the structural experiment, through repeated analysis. The analysis results estimated by the two methods are shown in Table 3.28.

**Table 3.28 Estimation value of effective PS force by analysis**

| Bridge | $f_{pu}$ | $f_{pe}$ by design code and estimation | | | | |
|---|---|---|---|---|---|---|
| | | Design (①) | Crack loading (②) | ① /② | Parametric (③) | ①/③ |
| Guro Overpass | 1,560 | 727 | 463 | 0.64 | 182 | 0.25 |
| Gunsunggang | 1,560 | 720 | 269 | 0.37 | 158 | 0.22 |
| Sansung-Woochun | 1,500 | 716 | 425 | 0.59 | 322 | 0.45 |

The results of the strain compatibility analysis performed again with the estimated effective prestressing force are as follows.

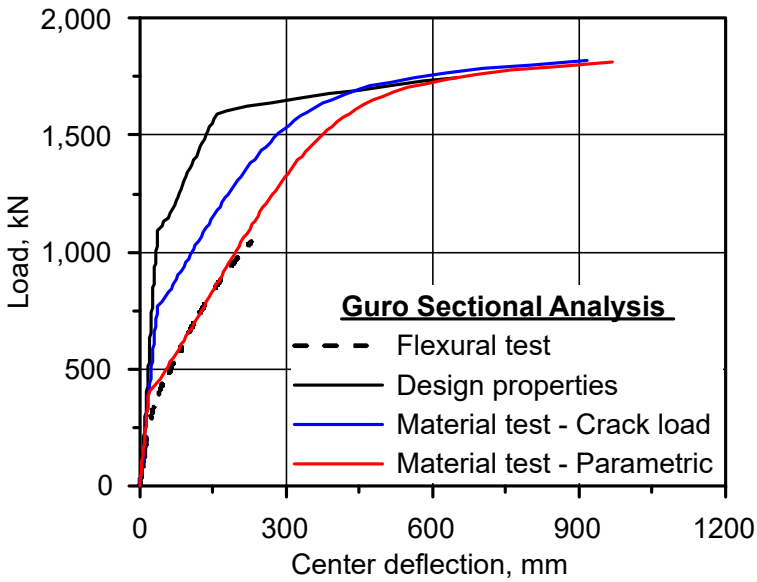


**Figure 3.50 Load-deflection of Guro Overpass by estimated $f_{pe}$**

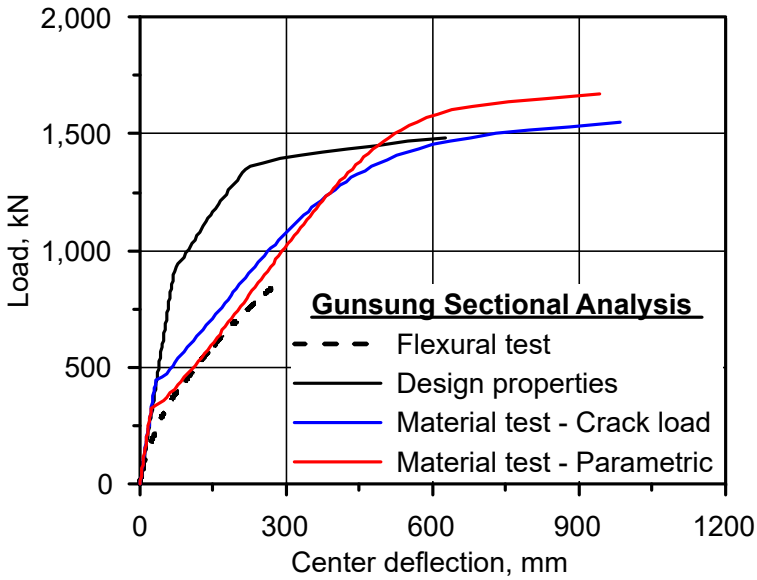


**Figure 3.51 Load-deflection of Gunsunggang by estimated $f_{pe}$**

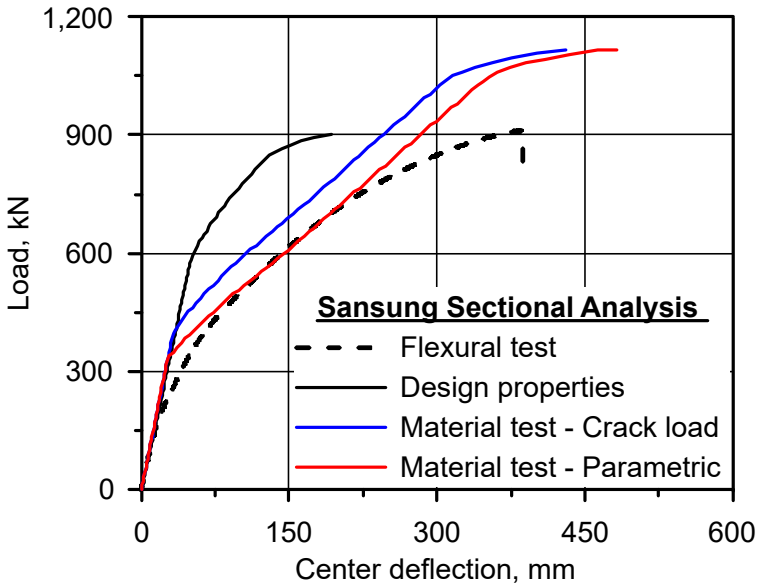


**Figure 3.52 Load-deflection of Sansung-Woochun by estimated $f_{pe}$**

As shown in the load-deflection graphs above, the analysis results applying the effective prestress force by cracking load showed a difference in behavior from the flexural tests. It's judged to be an error caused by not using the modulus of rupture from the material test and using the value assumed by the design criteria.

As a result of applying the $f_{pe}$ estimated by the parametric analysis, the curve similar to the bending behavior by the experiment was confirmed. The estimated as a parameter was $f_{pe}$ corresponding to 0.25, 0.22, and 0.45 times the value by KHBDC.

The exact cause of the decrease in the $f_{pe}$ couldn't be confirmed. All three bridges were in good condition with no flexural cracks due to lack of tension in the bottom of the girder, and no excessive deflection measured in the loading test in bridge evaluation in service. Therefore, it's presumed that the decrease occurred in the process of dismantling the specimen member or transporting it to the laboratory after the bridge was decommissioned.

## 3.4 Loading Tests

### 3.4.1 Loading Tests Overview

The vehicle loading tests were performed before demolition for Mojeon bridge, Gunsunggang bridge and Sansung-Woochun bridge by bridge evaluation companies commissioned by KLLBC. The loading test was performed in the same way as the static and dynamic tests in the current bridge evaluation in Korea.

The Mojeon bridge is a ramen bridge, and in May 2019, one 15-ton truck loaded with soil and the loading test was performed. The dimensions and weight of the truck used in the test are in Figure 3.53 and Table 3.29.

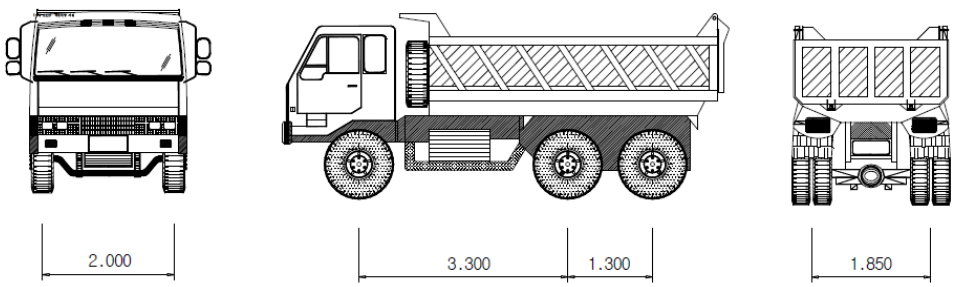


**Figure 3.53 Dimension of truck in Mojeon**

**Table 3.29 Weight of truck in Mojeon**

| Front wheel weight | Rear wheel weight | Total weight | Notes |
|---|---|---|---|
| 65 kN | 180 kN | 244 kN | 75.3 % of DB-18 |

In the case of the static loading test, the deflection and strain generated by the truck in the center of the span were measured. In the dynamic loading test, the deflection and strain generated by the moving truck in both directions (driving speed: 10, 20, 30, 40, 50, 60 km/h) were measured. The loading position and load case of the static test are in Figure 3.54 and Figure 3.55.

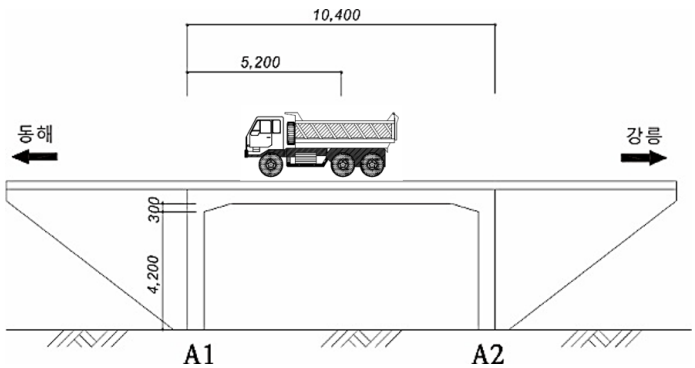


**Figure 3.54 Location of truck in Mojeon static loading test**

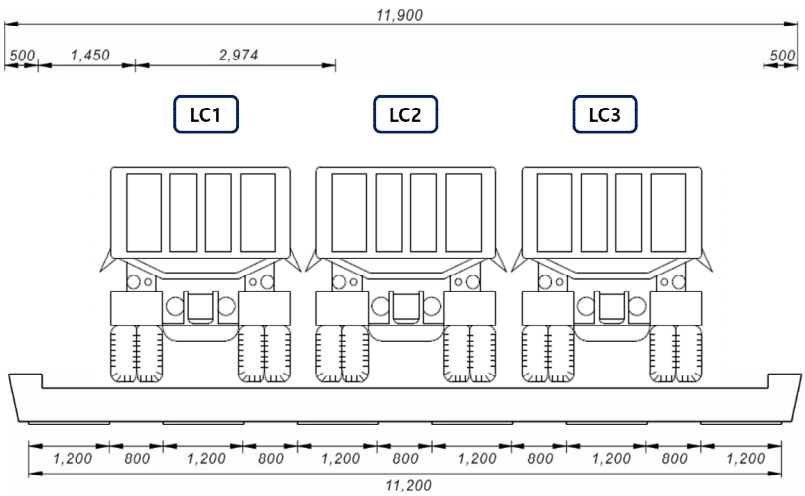


**Figure 3.55 Load cases of Mojeon static loading test**

The Gunsunggang bridge is a PSC-I composite girder bridge with two spans, and a loading test was performed in May 2019. The same truck used for the Mojeon bridge loading test was used.

In the case of the static loading test, the deflection and strain generated by the truck in the center of the span S2 were measured. In the dynamic loading test, the deflection and strain generated by the moving truck in both directions (driving speed: 10, 20, 30, 40, 50, 60 km/h) were measured. The loading position and load case of the static test are in Figure 3.56 and Figure 3.57. The data of the loading test were also measured at the center of the S2 span. The position and quantity of strain gauge and displacement gauge for data acquisition are in Table 3.30.

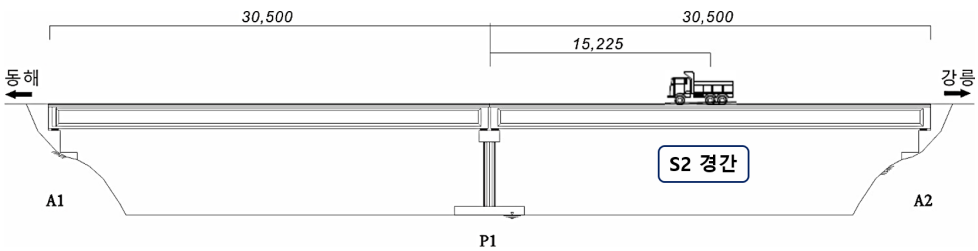


**Figure 3.56 Location of truck in Gunsunggang static loading test**

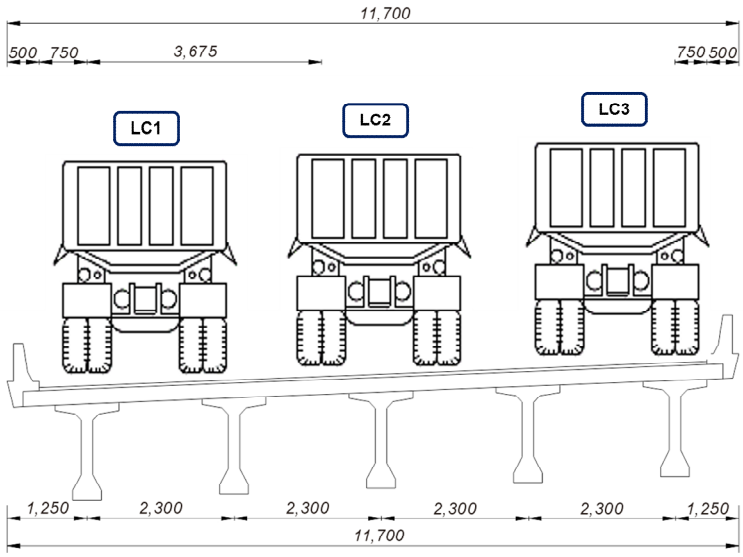


**Figure 3.57 Load cases of Gunsunggang static loading test**

**Table 3.30 Data acquisition of Gunsunggang loading test**

| Location | Sensor types | Location in members and purpose | | | ea |
|---|---|---|---|---|---|
| Maximum bending moment spot in the center S2 | Concrete strain gauge | - Girder bottom flange | G1~G5 | Tensile strain | 5 |
| | | - Girder upper flange | G1~G5 | Compressive strain | 10 |
| | | - Girder web | G1~G5 | Neutral axis and composite behavior | 10 |
| | | - Deck bottom | - | Effects of strengthened steel plates | 4 |
| | Deflection sensor | - Girder bottom | G1~G5 | Vertical deflection | 5 |

The Sansung-Woochun bridge is a PSC-I composite girder bridge with one span, and a loading test was performed in April 2020. The dimensions and weight of the truck used in the test are in Figure 3.58 and Table 3.31.

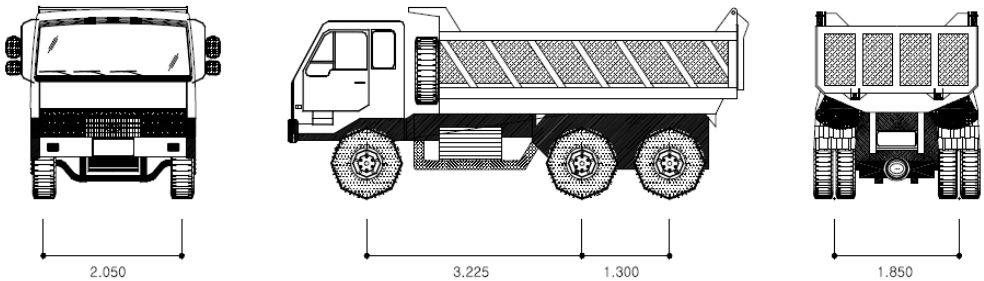


**Figure 3.58 Dimension of truck in Sansung-Woochun**

**Table 3.31 Weight of truck in Sansung-woochun**

| Front wheel weight | Rear wheel weight | Total weight | Notes |
|---|---|---|---|
| 74 kN | 190 kN | 264 kN | 81.5 % of DB-18 |

In the case of the static loading test, the deflection and strain generated by the truck in the center of the span were measured. In the dynamic loading test, the deflection and strain generated by the moving truck in both directions (driving speed: 10, 30, 50 km/h) were measured. The loading position and load case of the static test are in Figure 3.59 and Figure 3.60. The data of the loading test were also measured at the center of the span. The position and quantity of strain gauge and displacement gauge for data acquisition are in Table 3.32.

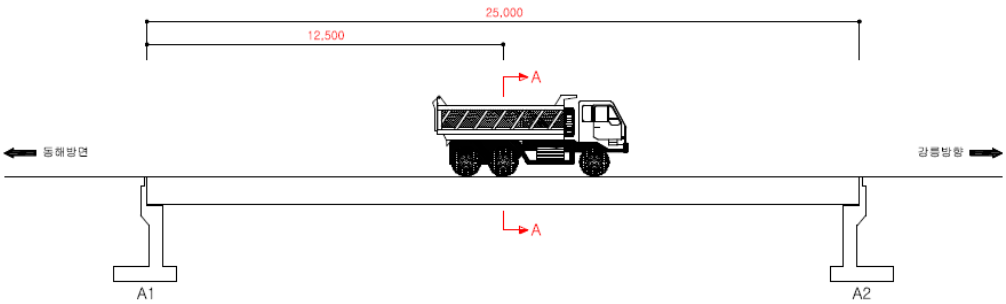


**Figure 3.59 Location of truck in Sansung-Woochun static loading test**

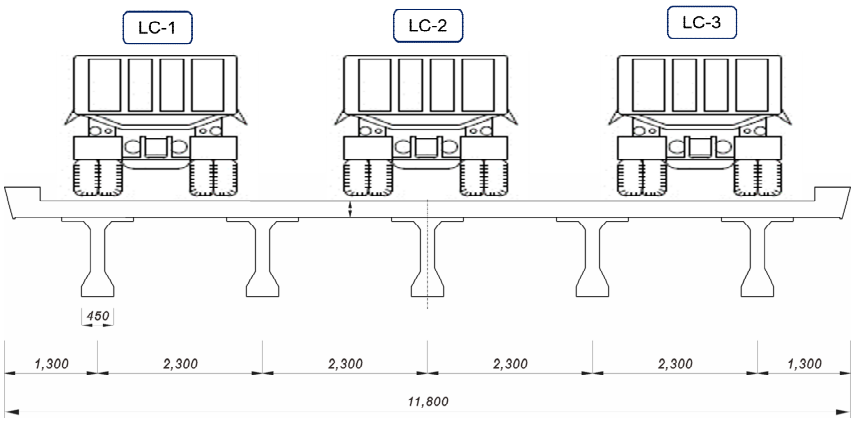


**Figure 3.60 Load cases of Sansung-Woochun static loading test**

**Table 3.32 Data acquisition of Sansung-Woochun loading test**

| Location | Sensor types | Location in members and purpose | | | ea |
|---|---|---|---|---|---|
| Maximum bending moment spot in the center | Concrete strain gauge | - Girder bottom flange | G1~G5 | Tensile strain | 5 |
| | | - Girder upper flange | G1~G5 | Compressive strain | 10 |
| | | - Girder web | G1~G5 | Neutral axis and composite behavior | 10 |
| | | - Deck bottom | - | Effects of strengthening FPR plates | 2 |
| | Deflection sensor | - Girder bottom | G1~G5 | Vertical deflection | 5 |

### 3.4.2 Analysis of Loading Test Results

#### 3.4.2.1 Static Loading Tests – Deflection Response Ratio

The response ratio was calculated by comparing the deflection value measured in the static loading tests with the value obtained by structural analysis. The current Detailed Guideline in Korea stipulates the deflection and strain response ratio by the loading tests. According to the manual published by the KISTEC, the reliability of the response ratio of concrete stress is relatively low in the case of concrete bridges due to damage and defects such as cracks, non-uniformity of structural materials, and uncertainty of theoretical values. Therefore, it's recommended to apply the response ratio of deflection rather than the strain representing the local response. In this study, the response ratio of deflection was also comparatively analyzed.

The deflection analysis of the static loading test was performed by using commercial finite element analysis (FEA) programs of DIANA and MIDAS. With the DIANA, 3D solid elements were applied to model the bridge structure. For the mesh size, 200 mm, which was previously used for FEA of loading tests of other concrete bridges was applied (Seoul National University, 2017). In the case of the MIDAS program, modeling was performed in the same way as the structural analysis of the loading tests performed in Korea existing bridge evaluation. The RC ramen bridge was modeled with 3D rigid-frame elements, and the PSC-I composite girder bridge was modeled with a shell element for the deck and a frame element for the girder. The modelling elements of the deck and the girder were connected by rigid link method. The girder, crossbeam and deck were modeled by referring to

the cross section specifications of the bridge evaluation reports of each bridge. Due to the characteristics of the loading test performed in the linear elastic range, reinforcing bars and PS steels weren't included in the FEA modeling. In the case of the vehicle load, it was loaded on the node corresponding to the same location as the loading position of the actual tests. The details of FEA modeling methods are described in Table 3.33.

**Table 3.33 Details of FEA modeling for loading tests**

| | Bridge | Structure types | DIANA | | MIDAS | |
|---|---|---|---|---|---|---|
| | | | Element | Mesh size | Element | Deck-girder link |
| 1 | Mojeon | Ramen | 3D Solid | 200 mm | 3D Rigid-Frame | - |
| 2 | Gunsung-gang | PSC-I | 3D Solid | 200 mm | 3D Shell-Frame | Rigid |
| 3 | Sansung-Woochun | PSC-I | 3D Solid | 200 mm | 3D Shell-Frame | Rigid |

For material properties, the elastic modulus calculated by applying the design compressive strength ($E_{c,design}$) of concrete and the average core compressive strength ($E_{c,test}$) to the formula (Equation 3.7) of KHBDC and also the Poisson's ratio of KHBDC was applied. The used applied material properties are described in Table 3.34.

**Table 3.34 Material properties of FEA for loading tests**

| | Bridge | Member type | $E_{c,design}$ | $E_{c,test}$ |
|---|---|---|---|---|
| 1 | Mojeon | RC deck | 27,804 MPa | 27,857 MPa |
| 2 | Gunsung-gang | RC deck | 27,804 MPa | 31,767 MPa |
| | | PSC girder | 29,779 MPa | 27,292 MPa |
| 3 | Sansung-Woochun | RC deck | 26,986 MPa | 31,604 MPa |
| | | PSC girder | 29,779 MPa | 28,349 MPa |
| - Poisson's ratio, $\nu$ : 0.167 (KHBDC 2010) | | | | |

The results of the deflection response ratio of the static loading test of the bridges by the FEA methods and material properties were compared. For the deflection of the loading tests, the value measured in the test performed after removing the strengthening effects. The example of FEA modeling and results for Mojeon bridge's static loading test are Figure 3.61 ~ Figure 3.64.

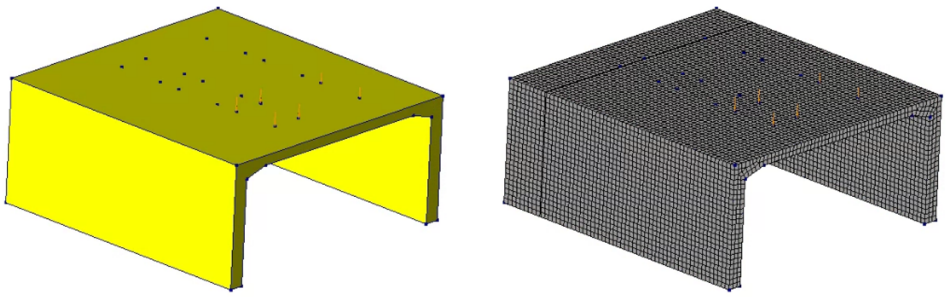

**Figure 3.61 DIANA modeling of Mojeon (LC-1)**

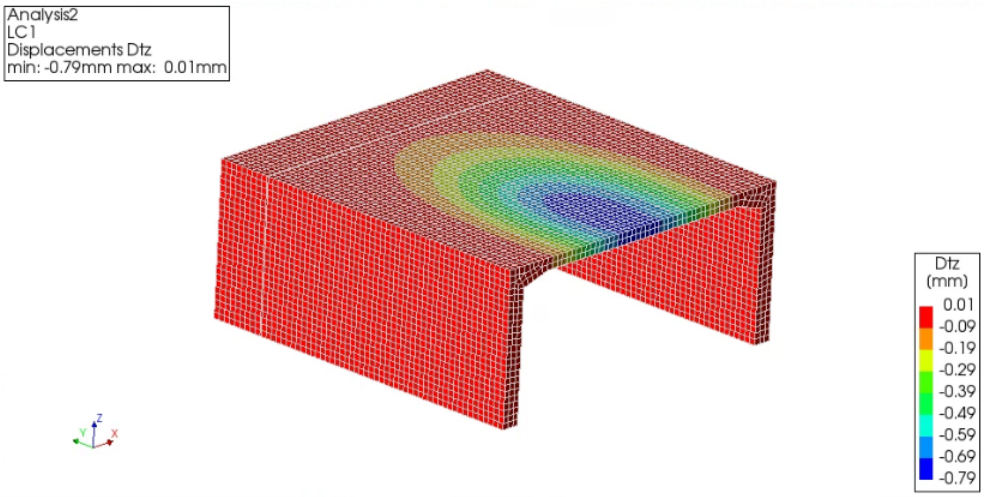


**Figure 3.62 DIANA result of Mojeon (LC-1)**

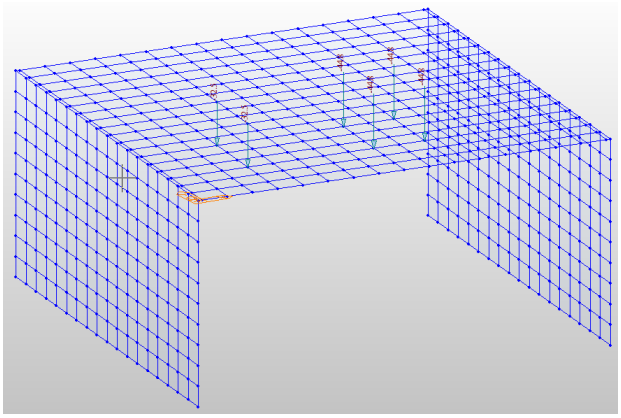

**Figure 3.63 MIDAS modeling of Mojeon (LC-1)**

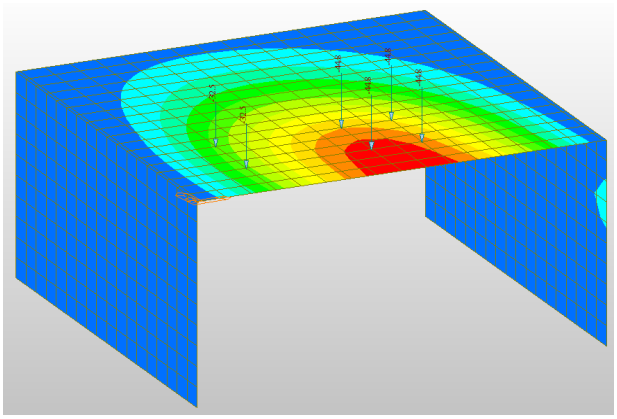

**Figure 3.64 MIDAS result of Mojeon (LC-1)**

For the case where the maximum deflection of each load case occurred in the test, the response ratio ($\delta_{analysis} / \delta_{test}$) according to the analysis is in Table 3.35. When calculating the deflection response ratio according to the test results, the ratio is calculated based on the maximum deflection occurred. The ratios for each bridge are indicated in bold in the Table.

**Table 3.35 Deflection response ration in static loading tests**

| | Bridge | Load case and measured location | $\delta_{test}$ , mm (①) | FEA deflection and response ratio | | | | | | | |
|---|---|---|---|---|---|---|---|---|---|---|---|
| | | | | DIANA | | | | MIDAS | | | |
| | | | | $E_{c,design}$ (②) | | $E_{c,test}$ (③) | | $E_{c,design}$ (④) | | $E_{c,test}$ (⑤) | |
| | | | | $\delta_{analysis}$ , mm | ②/① | $\delta_{analysis}$ , mm | ② /① | $\delta_{analysis}$ , mm | ④/① | $\delta_{analysis}$ , mm | ⑤/① |
| 1 | Mojeon | LC1-Dis 1 | 0.67 | 0.77 | 1.15 | 0.77 | 1.15 | 0.81 | 1.21 | 0.81 | 1.21 |
| | | LC3-Dis3 | **0.73** | 0.78 | **1.07** | 0.77 | **1.05** | 0.81 | **1.11** | 0.81 | **1.11** |
| 2 | Gunsung-gang | LC1-G1 | 5.16 | 4.46 | 0.86 | 4.60 | 0.89 | 5.70 | 1.10 | 5.79 | 1.12 |
| | | LC3-G5 | **6.03** | 4.45 | **0.74** | 4.60 | **0.76** | 5.67 | **0.94** | 5.77 | **0.96** |
| 3 | Sansung-Woochun | LC1-G5 | 7.25 | 8.81 | 1.22 | 8.65 | 1.19 | 9.37 | 1.29 | 9.12 | 1.26 |
| | | LC3-G1 | **7.26** | 8.92 | **1.23** | 8.72 | **1.20** | 9.41 | **1.30** | 9.20 | **1.27** |

The difference in deflection according to the modeling method of FEA wasn't significant. The analysis deflection value by MIDAS showed a tendency (when the modulus of elasticity of design was applied) that was 1.04 to 1.28 times larger than the value by the DIANA program. However, the correlation of the deflection response ratio greater or less than 1.0 wasn't affected. And when the elastic modulus calculated from the average core compressive strength was applied to the PSC-I composite bridge, the analysis deflection value showed a similar tendency to the test deflection value compared to the case where the design elastic modulus was applied, but the effect was also insignificant.

Therefore, in the case of good external appearance like the bridges on which the loading tests has been performed (Condition Inspection Grade C or higher in bridge evaluation), using the value of modulus of elasticity of design code is considered reasonable.

### 3.4.2.2 Dynamic Loading Tests

The measured impact factor was calculated from the relationship between the maximum deflection value in the time history curve of deflection measured in the static and dynamic loading tests. For the deflection value of the dynamic loading tests, a value filtered with a Low Pass Filter with a cutoff frequency of 2 Hz was applied. The cutoff frequency was determined as a value at which the data of the loading test stably converges by applying the trial and error method. Using this result, the measured impact factor was evaluated as Equation 3.11.

$$i_m = \frac{\delta_{dyn.}}{\delta_{sta.}} - 1 \tag{3.11}$$

where, $\delta_{dyn.}$ is the maximum deflection in the dynamic loading tests, $\delta_{sta.}$ is the maximum deflection in the static loading tests

As a result of evaluating the impact factors in the loading tests, it was confirmed that the factors were 0.3 or less, which is the upper limit of the impact factor of KHBDC in all bridge cases. And in the case of the Mojeon and Sansung-Woochun bridges, the measure factors smaller than the theoretical factor by the KHBDC was confirmed. Therefore, it's judged that the impact factor on the bridge is smaller than the impact effects of the live load considered in the design process. On the other hand, in the case of the Gunsunggang bridge, the deflection response ratio was evaluated to be less than 1.0 in the static loading test, and the measured impact factor was larger than the theoretical value. Thus, it's judged that the

stiffness of the bridge decreased during the 45 years of service.

**Table 3.36 Impact factors in the loading tests**

| | Bridge | Speed, km/h | Max. deflection, mm | | $i_{test}$ | $i_{analysis}$ |
|---|---|---|---|---|---|---|
| | | | Dynamic | Static | | |
| 1 | Mojeon | 50 | 0.83 | 0.73 | 0.121 | 0.296 |
| 2 | Gunsunggang | 50 | 7.87 | 6.26 | 0.257 | 0.214 |
| 3 | Sansung-Woochun | 50 | 7.17 | 5.98 | 0.198 | 0.226 |

## 3.5 Safety Assessment of Existing Concrete Bridges Based on Test Results

### 3.5.1 Safety Factor and Rating Factor

In the current Detailed Guideline in Korea, the structural safety of the existing concrete bridge members is evaluated by the safety factor (*SF*) and rating factor (*RF*) by structural calculation.

$$SF = \frac{\phi M_n}{M_u} = \frac{\phi M_n}{\gamma_d M_d + \gamma_l M_l (1+i)} \tag{3.12}$$

$$RF = \frac{\phi M_n - \gamma_d M_d}{\gamma_l M_l (1+i)} \tag{3.13}$$

As shown in the Equation 3.12 and Equation 3.13, the strength of concrete bridge's member is applied when calculating the safety factor and rating factor. The Guideline stipulates that the member strength should be calculated by the nominal strength and strength reduction factor of the KHBDC and considering the current state of the section (material strength, loss of section, etc.). Considering the current state of the cross section, the material strength should use the strength obtained from a material test such as a core compression test, and the loss of the cross section could be reflected by applying the actual measured value at the bridge site. If the material test isn't performed, the strength of the member is calculated by applying the design standard strength. And since the nominal strength and strength reduction factor of the KHBDC are equally applied, the strength calculation formulas for RC and PSC bending members are the same as Equation 3.14 and

Equation 3.15, respectively. And the strength reduction factor for RC member and post-tensioned member is 0.85.

$$M_{n,RC} = 0.85 f_{ck} ab\left(d - \frac{a}{2}\right) = A_s f_y \left(d - \frac{a}{2}\right) \tag{3.14}$$

$$M_{n,PSC} = A_p f_{ps} d_p \left(1 - 0.59 \frac{\rho_p f_{ps}}{f_{ck}}\right) \tag{3.15}$$

where, $f_{ck}$ is the concrete design compressive strength (MPa), $a$ is the depth of equivalent rectangular distribution (mm), $b$ is the width of the member (mm), $d$ is the distance from the top fiber to the centroid of tensile rebars (mm), $A_s$ is the area of tensile rebars (mm$^2$), $f_y$ is the yield strength of tensile rebar (MPa), $A_p$ is the area of PS steels (mm$^2$), $f_{ps}$ is the average stress of PS steels under factored load (MPa), $d_p$ is the distance from the top fiber to the centroid of PS force (mm), $\rho_p$ is the ratio of PS steels. If $f_{pe}$ is 0.5 times or more of the $f_{pu}$, $f_{ps}$ could be obtained through the KHBDC simple formula, and if it's less than 0.5 times, the value should be obtained through detailed analysis.

In the bridge evaluation reports of the existing bridges in Korea analyzed in the Chapter 2, the flexural strength of superstructure members was calculated by applying the design strength in all cases. The safety factor and rating factor calculated by the flexural strength evaluated by material tests and indoor structural tests for the demolished bridge members were compared with the safety factor and rating factor according to the current Guideline in Korea. Through this, it was analyzed how the safety factor and rating factor calculated safety assessment in

existing concrete bridges evaluate the actual safety factor and rating factor of old concrete bridge members. The flexural strength of each bridge specimen is in Table 3.37. The calculated flexural strength is $M_n$, $M_{eq}$, and $M_{eq-c}$, and each means the flexural strength calculated with the design strength of material, the strength calculated with the corrected strength by material tests, and the strength calculated with the concrete core compressive strength from core compression test. Since it's almost impossible to perform material tests by collecting specimens of reinforcing bars and PS steels inside members of the existing concrete bridges, the flexural strength applied only to the compressive strength of the concrete core was also included in the comparison case. Finally, the structural test flexural strength, $M_{test}$ is the strength measured by adding the bending moment due to the self-weight of the specimen to the flexural strength calculated with the maximum load measured in the structural tests.

**Table 3.37 Flexural strength of test bridges**

| | Bridge | Member types | Material strength, MPa | | | | Calculated flexural strength, kN-m | | | $M_{test}$, kN-m | Notes |
|---|---|---|---|---|---|---|---|---|---|---|---|
| | | | $f_{ck}$ | $f_{c,eq}$ | $f_y$ or $f_{pu}$ | $f_{y,eq}$ $f_{pu,eq}$ | $M_n$ | $M_{eq}$ | $M_{eq-c}$ | | |
| 1 | Seoul Sta. | Slab | 27 | 30.4 | 240 | - | 2,293 | - | 2,318 | 2,935 | Member yielding |
| 2 | Mojeon | Slab | 27 | 35.2* | 400 | 425 | 512 | 553 | 523 | 562 | Flexural failure |
| 3 | Guro Overpass | Deck | 27 | 25.6 | - | - | 10,001 | 10,552 | 10,066 | - | Test termination before yielding |
| | | Girder | 35 | 36.8 | 1,560 | 1,625 | | | | | |
| 4 | Gunsung-gang | Deck | 27 | 37.5 | - | - | 9,083 | 10,134 | 9,525 | - | |
| | | Girder | 35 | 22.1 | 1,560 | 1,647 | | | | | |
| 5 | Sansung-Woochun | Deck | 24 | 26.9 | - | - | 5,801 | 6,633 | 5,906 | 6,943 | Flexural failure |
| | | Girder | 35 | 26.5 | 1,500 | 1,659 | | | | | |

*) average core compressive strength

With the calculated flexural strength and structure test strength, the safety factor and rating factor was evaluated of each bridge test specimens. When evaluating the safety factor and rating factor by calculated flexure strength, the strength reduction factor was applied to the flexural strength, and the factor was not applied because the strength from the bending test was actually measured. The moment due to the dead load was calculated as the bending moment under its self-weight according to the measured dimensions of the specimen, and the larger of the moment due to DB and DL load of the bridge was applied as the section force due to the live load. In the case of the Mojeon RC slab, the size of the cut RC slab was too small enough to carry the DB load, so the flexural moment caused by the only DL load was applied. The results of comparison of safety factor and rating factor according to the kinds of flexural strength is in Table 3.38 and Table 3.39.

**Table 3.38 Safety factor as flexural strength**

| | Bridge | Safety Factor (*SF*) | | | |
|---|---|---|---|---|---|
| | | $\phi M_n$ | $\phi M_{eq}$ | $\phi M_{eq-c}$ | $M_{test}$ |
| 1 | Seoul Sta. | 1.01 | - | 1.02 | 1.52 |
| 2 | Mojeon | 2.01 | 2.17 | 2.06 | 2.21 |
| 3 | Guro Overpass | 1.30 | 1.37 | 1.31 | - |
| 4 | Gunsung-gang | 1.16 | 1.30 | 1.22 | - |
| 5 | Sansung-Woochun | 1.06 | 1.22 | 1.08 | 1.50 |

**Table 3.39 Rating factor as flexural strength**

| | Bridge | Rating Factor (*RF*) | | | |
|---|---|---|---|---|---|
| | | $\phi M_n$ | $\phi M_{eq}$ | $\phi M_{eq-c}$ | $M_{test}$ |
| 1 | Seoul Sta. | 1.03 | - | 1.06 | 1.87 |
| 2 | Mojeon | 2.47 | 2.70 | 2.53 | 2.76 |
| 3 | Guro Overpass | 1.51 | 1.63 | 1.52 | - |
| 4 | Gunsung-gang | 1.27 | 1.49 | 1.36 | - |
| 5 | Sansung-Woochun | 1.10 | 1.33 | 1.12 | 1.75 |

As a result of comparing the safety factor and rating factor, it was confirmed that the factors evaluated by the flexural strength of the structural test in all cases where the member yielding or flexural failure occurred in the structure test were the highest compared to the case where other flexural strengths were applied. In order for a flexural member to show structural performance beyond the required level, the tensile reinforcing bars and PS wires must have strength exceeding the design standard, don't cause loss of section, and show sufficient bonding performance.

In the material tests conducted on the demolished bridge members, even after several decades of service year, the actual strength of the reinforcing bars and PS steels was measured above the design standard strength, and there was no serious corrosion damage, so there was no loss of section. And in the indoor structural

experiment, it was confirmed that the bonding performance of the rebars and PS wires until the member yielding or flexural failure was exhibited. The average and corrected values of the concrete core strength of the member compressive section were evaluated to be higher than the design compressive strength. Therefore, it was found that the actual flexural strength of the old demolished bridge members was higher than the nominal flexural strength with the design material strength.

The flexural strength calculated by applying the compressive strength of concrete core and tensile test strength of rebar and PS wire is higher than the nominal flexural strength. In this study, it was possible to measure to actual strength of the demolished bridge members through a tensile test by taking specimens of rebars and PS steels from inside the members. However, it's generally judged that it's impossible to take the specimens inside members of concrete bridges in service. Therefore, it compared the flexural strength calculated by applying the compressive strength evaluated through the core compression test that could be performed realistically and the safety factor and rating factor from the nominal flexural strength. The corrected core compressive strength evaluated in the RC slab and deck was higher than the design compressive strength. The corrected core compressive strength of the PSC girders of the Gunsunggang and Sansung-Woochun bridge was measured to be less than the design compressive strength. However, when calculating the flexural strength of the member, only the strength of the steels and the concrete in the compressive part are applied, so the concrete compressive strength of the girders didn't affect the calculation of the safety factor and rating factor. In this way, it was confirmed that the safety factor and rating factor calculated by applying the core compressive strength statically corrected that might occur when the core is collected in service are also higher than the safety

calculated by the nominal flexural strength.

Except for the deck of Sansung-Woochun bridge, the specimens from the decommissioned bridges that had undergone material tests and indoor structural tests were evaluated to be in a good condition of grade C or higher as a result of the condition inspection. Although the result of the exterior examination of the Sansung-Woochun bridge was poor as grade 'd', the core compressive strength value was 1.12 times of $f_{ck}$, and the flexural strength measured in the structural test was also evaluated to be 1.20 times the nominal flexural strength. The major types of damage and deterioration found during the visual inspection were crazing cracks (defects in the early stage of construction) and efflorescence on the bottom surface, spalling and rebar exposure in the cantilever part. So, the inspected damage and deterioration didn't decrease of the structural performance of the member. Therefore, if the exterior condition is good (Condition grade C or higher) or damage and deterioration doesn't affect the structural performance of the member in service, the safety factor and rating factor of the aged concrete bridge members is evaluated in terms of safety.

### 3.5.2 Load Carrying Capacity by Loading Tests

In the Detailed Guideline in Korea, the load carrying capacity ($P$) by the loading test is evaluated by applying the response adjustment factor ($K_s$) calculated from the deflection or strain response ratio and the impact factor as shown in Equation 3.16. $P_r$ means the design live load of the bridge

$$P = RF \times K_s \times P_r \tag{3.16}$$

$$K_s = \frac{\delta_{analysis}}{\delta_{test}} \times \frac{1+i_{analysis}}{1+i_{test}} \quad \text{or} \quad \frac{\varepsilon_{analysis}}{\varepsilon_{test}} \times \frac{1+i_{analysis}}{1+i_{test}} \tag{3.17}$$

The response adjustment factor is applied to reflect the actual response of the existing bridges, which is not included in the structural analysis. And, as discussed in the Chapter 2, in the Korean manual related to load carrying capacity evaluation, the use of a deflection response for concrete bridges is recommended due to the characteristics of the constituent materials.

The deflection response ratio according to the modulus of elasticity of concrete of the demolished bridges on which the loading test was performed was comparatively analyzed. The deflection response ratio was calculated based on the loading case in which deflection occurred the most in the static loading test performed in service. The elastic modulus of concrete for comparison of the deflection response ratio was calculated by applying the design concrete compressive strength and average core compressive strength to the formula of the KHBDC. The deflection value of structural analysis was calculated with DIANA and MIDAS, which are commercial FEA programs, and the detailed analysis

process was described in Chapter 3.4.2.

**Table 3.40 Deflection ratio by modulus of elasticity**

| | Bridge | $\delta_{test}$ , mm | Deflection ratio (DIANA) | | Deflection ratio (MIDAS) | |
|---|---|---|---|---|---|---|
| | | | $E_{c,design}$ | $E_{c,test}$ | $E_{c,design}$ | $E_{c,test}$ |
| 1 | Mojeon | 0.73 | 1.07 | 1.05 | 1.11 | 1.11 |
| 2 | Gunsunggang | 6.03 | 0.74 | 0.76 | 0.94 | 0.96 |
| 3 | Sansung-Woochun | 7.26 | 1.23 | 1.20 | 1.30 | 1.27 |

As a result of comparing the structural analysis deflection values according to the modulus of elasticity of concrete, the differences in deflection values of Mojeon, Gunsung and Sansung-Woochun bridge were only 0.01 mm, 0.15 mm, and 0.21 mm, respectively at the maximum. Therefore, the difference in the deflection response ratio due to the concrete elastic modulus was evaluated to be negligible. And the tendency for the deflection response ratio to be above or below 1.0 didn't change depending on the type of modulus of elasticity of concrete applied to the structural analysis. Therefore, it's judged reasonable to apply the design material properties of concrete to obtain the deflection analysis value when no serious damage or deterioration is found in the visual inspection, such as the test bridges.

# 4. Proposal of Efficient Bridge Evaluation Method for Concrete Bridges

Since the enactment of the Act in 1995, bridge evaluation for the maintenance and management of the existing concrete bridges have been regularly performed in Korea. The current condition and structural safety of the existing concrete bridges are evaluated through bridge evaluation, and a maintenance plan is established accordingly and necessary actions are taken. This study was started to find out at what level the current bridge evaluation method in Korea evaluates the performance of concrete bridges.

First, the bridge evaluation guidelines for the existing bridges of Korean and foreign countries were comparatively analyzed, and actual evaluation cases were collected and analyzed. Through this, the current level of bridge evaluation for concrete bridges in Korea is to a certain extent compared to other countries. The characteristics and limitations of the current evaluation method were identified. In addition, material tests and indoor structural tests were conducted to know the actual structural performance of the old concrete bridge members after several decades of service year.

Based on the analysis results, a more efficient bridge evaluation method was presented compared to the current method for the existing concrete bridges. The proposed evaluation method mainly corresponds to the superstructure of the concrete bridge and doesn't include the evaluation of the substructure part.

## 4.1 Condition Inspection

### 4.1.1 Visual Inspection

As a result of analyzing the condition inspection guidelines for concrete bridges in Korea, the United States, Canada, the United Kingdom, and Japan, visual inspection is regularly performed as a basic method of bridge inspection in all guidelines. By regularly conducting exterior surveys, the current condition of the existing bridge is identified and changes are tracked. As with the current bridge inspection, the visual inspection is performed regularly as a basic task, and the inspection interval should be decided according to the grade of the previous evaluation. Instead, it's important to determine whether the problems discovered through the visual inspection have progressed over time. For example, if damage is caused by a natural disaster or vehicle collision, you could find it in the next inspection and take corrective action accordingly. However, if the deterioration found in the visual inspection has progressed further in the next evaluation, the cause of the problem should be identified and the possibility of performance degradation inside the member, such as reinforcing bars and PS wires, should be analyzed.

### 4.1.2 Concrete NDT and Material Tests

Concrete compressive strength is used as a major indicator to evaluate the durability and structural performance of the existing concrete bridges. A representative evaluation method for durability of concrete bridges is to evaluate the condition of concrete cover through a non-destructive test. According to the current Detailed Guideline in Korea, the concrete condition is quantitatively evaluated by comparing the compressive strength of concrete estimated through NDT of rebound hardness and ultrasonic tests with the design compressive strength or by comparing the compressive strength estimated in the sound and unsound sport. However, the NDT weren't conducted regularly in other countries, which are subject to comparative analysis of condition inspection guidelines. The reason is considered to be that the accuracy of the compressive strength estimated by the NDT is low. The low accuracy of concrete NDT strength was also found in the results of rebound hardness, ultrasonic test and core compression tests performed on cores specimens collected from members of demolished bridges. It was confirmed that the estimated strength by both the rebound hardness and ultrasonic test didn't have a specific tendency with the average core compressive strength.

In addition, as a result of checking the rebound hardness history in the bridge evaluation written in Korea, it was difficult to quantitatively evaluate the condition of unsound concrete using the current method, and it was difficult to understand the tendency of meaningful changes in the concrete durability. Although it's stipulated in the Guideline to compare the strength of the sound and non-sound sport, the NDT has been performed regardless of the external state, or even though the strength of the non-sound spot is estimated, it's not recorded in detail in the reports

what kinds of damage or deterioration of the problem.

Although the accuracy of the compressive strength estimated by the NDT is not guaranteed, the difference in strength between sound and non-sound spot is significant, and it's described in the NDT guidelines of Korea and the United States. Therefore, it's necessary to perform the concrete NDT for durability evaluation as follows. First, the point with the worst external status is investigated through the visual inspection of all members of the existing concrete bridge. Record the location and types of the damage or deterioration in detail. After that, the concrete rebound hardness test at the spot is evaluated, and the concrete NDT strength of the place with good status in the vicinity of the same types of member is evaluated. The reason that the rebound test was determined as the representative NDT method is that the type of NDT doesn't affect the accuracy of the estimated strength, and the rebound hardness test is easier to perform compared to the ultrasonic testing. The minimum number of the test to be performed is applied in the same way as the current Guideline, and if the number of points with relatively poor external status is more than the minimum number, NDT of the excess number should be performed. In this way, by comparing the NDT strength of concrete in the sound and non-sound spot according to the external condition, the durability of the concrete in the poor condition could be evaluated indirectly. If the durability of concrete is judged to have decreased through a NDT, and if there is concern about deterioration of the structural safety of the existing bridges due to reduced durability, additional material tests, such as chloride ion, carbonation depth, and core compression test, etc., to determine the cause and degree of deterioration in detail.

**Table 4.1 Proposed evaluation method of concrete NDT**

| | Current method | Proposed method |
|---|---|---|
| Test types | - Rebound hardness<br>- Ultrasonic | - Rebound hardness |
| Test number (superstructure) | 2 ea / 50 m | 2 ea / 50 m |
| Test spot determination criteria | - | Points of worst damage and deterioration occurred |
| Durability evaluation criteria | ① Comparison with $f_{ck}$<br>② Comparison of sound/non-sound spot | Comparison of sound/non-sound spot |
| Evaluation result record | - Estimated strength<br>- Test location | - Estimated strength<br>- Test location<br>- Details of damage and deterioration where tested |

## 4.2 Safety Assessment

### 4.2.1 Safety Assessment Regulations

In Korea, the structural safety of the existing concrete bridge members is evaluated by the safety factor in the Full Safety Diagnosis conducted every 4 to 6 years. The safety factor of the flexural members of the superstructure of the bridge is calculated as the design flexural strength compared to the required flexural moment of the member. As a result of the bridge evaluation reports written in Korea, the required moment in all reports was calculated by applying the same load and load factor as the KHBDC, and the member flexure strength was calculated by applying the design standard strength. Therefore, although Korea regularly evaluated the safety factor of the concrete bridge members, it hardly reflects the characteristics of the old concrete bridges, and safety assessment is always performed at the same level as the design standard.

Evaluating the safety of the existing bridge members at the same level as the design standard always makes it less reasonable to regularly conduct safety assessment. This could be seen from the fact that the assessment is performed only when necessary in the United States, Canada, the United Kingdom, and Japan, except for Korea. The cases that require safety assessment include: 1) concerns about structural performance degradation due to deterioration in bridge condition, 2) increase in live load, and 3) changes in the structure system. Structural safety assessment of the existing bridges needs to be performed by reflecting the characteristics of the bridge, such as calculating member strength by applying the material strength measured in tests such as core compression tests, or performing structural analysis reflecting lie load or structural system changes.

And as a result of comparative analysis of domestic and foreign safety assessment guidelines, the Korean Guideline always applied the same live load factor as the KHBDC. On the other hand, in the US AASHTO MBE, it's possible to evaluate the rating factor by applying the reduced live load factor reflecting the reduced uncertainty of the live load compared to the design process. As such, Korean Guideline have a more conservative level of safety assessment than foreign safety assessment guidelines.

**Table 4.2 Proposed safety assessment regulation**

| | Current regulation | Proposed regulation |
|---|---|---|
| Assessment interval | At Full Safety Diagnosis (4~6 years) | When necessary* |

*) When safety assessment is necessary, it's defined as follow cases

1) In case of severe damage or deterioration was found during the visual inspection, such as inspection grade D or lower, and the structural performance degradation of the member is suspected as a result of NDT and material tests

2) In case of serious loss of cross section due to vehicle collision, etc.

3) When it's judged that the structural system has changed due to strengthening effects

4) When the live load is increased

### 4.2.2 Evaluation of Flexural Strength

For the existing concrete bridges, it's possible to extract only a small amount of core specimens within a limited range. In the most cases, it's practically impossible to collect specimen of reinforcing bars and PS steels that dominate the strength of flexural members, and in particular, it's impossible to experimentally evaluate the actual bending strength of the aged bridge members unless the bridge is demolished. Therefore, it hasn't yet been confirmed in Korea at what level the flexural strength of bridge members, which is calculated with the design strength according to the current Guideline, evaluates the actual flexural strength.

In this study, the actual bending strength was directly evaluated experimentally by conducting material tests and indoor structural tests on the members of the decommissioned bridge. The material test strength measured in the core compression test and tensile test of rebars and PS wires was higher than the design strength. As a result of statistically corrected the core compressive strength of some PSC girder, the strength below the design compressive strength was evaluated, but the compressive strength of the concrete in compressive section of the PSC-I composite section required for member flexural strength calculation is higher than the design strength in all specimens. Therefore, if damage and deterioration are not serious, such as grade C or higher in condition inspection, the actual flexural strength of the aged concrete bridge member is judged to be above the nominal flexural strength.

### 4.2.3 Loading Tests

It the safety assessment, the structural performance of the existing concrete bridges is evaluated in a theoretical method based on structural calculation. In the case of the aged bridges, the uncertainty of structural calculation could be reduced compared to the design process by measuring the actual cross-sectional dimensions, material strength, and traffic volume. Nevertheless, domestic and foreign safety assessment guidelines and manuals point out that there is a limit to the accuracy of interpreting the behavior of an existing bridge in a theoretical way for the following reasons.

1) The structural analysis requires many assumptions.

2) It's impossible to accurately reflect the all changes in material properties and mechanical properties of members due to the increase in service years.

3) The stiffness of the actual bridges tends to increase compared to individual members due to the lateral load distribution and the influence of other members, such as barrier.

The vehicle loading tests apply a specific truck load to a specific location of the bridge, so it doesn't require assumptions on the properties of materials and members of the structure, and damage and deterioration could be reflected naturally. However, traffic control is unavoidable to perform the loading test, which causes inconvenience to citizen and requires considerable cost and labor to perform the test. As a result of analyzing the test history in Korea, it wasn't possible to generalize the analysis results of specific bridges, such as that different response adjustment factors were derived for each bridge even when similar

vehicle loads were applied to bridges with similar structural types and specifications. In addition, there was a case of a bridge in which the response adjustment factor of 1.0 or less was evaluated even though the safety factor and rating factor were evaluated as 1.0 or higher by analysis. In other words, although the deflection from the loading test was larger than that from the structural analysis, the condition of the bridge was good, and the load carrying capacity was evaluated as higher than the design live load, confirming that the structural safety of the member was sufficient. It was judged that the effectiveness of the load carrying capacity assessment by applying the current response adjustment factor was low. Therefore, like the safety assessment by calculation, the loading test could be an effective method to assess the bridge's capacity to be performed only when necessary. The current Korean Guideline describes cases where a loading test is necessary, and the evaluation engineer has to decide whether to perform the test based on the results of visual inspection, NDT, material tests, and structural analysis.

**Table 4.3 Proposed loading test regulation**

| | Current regulation | Proposed regulation |
|---|---|---|
| Loading test interval | Usually at Full Safety Diagnosis (4~6 years) | When necessary* |

*) When a loading test is required, it's defined as follows.

1) When verification of the structural analysis method is required

2) When it needs to check the actual load carrying capacity of the bridge, because the safety factor or rating factor by structural calculation are evaluated to be less than the required level

3) When excessive deflection or vibration occurs during use

## 4.3 Proposal of Bridge Evaluation Process of the Existing Concrete Bridges

The flow chart of the current Full Safety Examination and Full Safety Diagnosis (basic task) of the existing concrete bridges in Korea is as Figure 4.1 and Figure 4.2. As mentioned before, NDT, material tests, and safety assessment (including of loading test) are regularly performed regardless of the current condition of the existing concrete bridges.

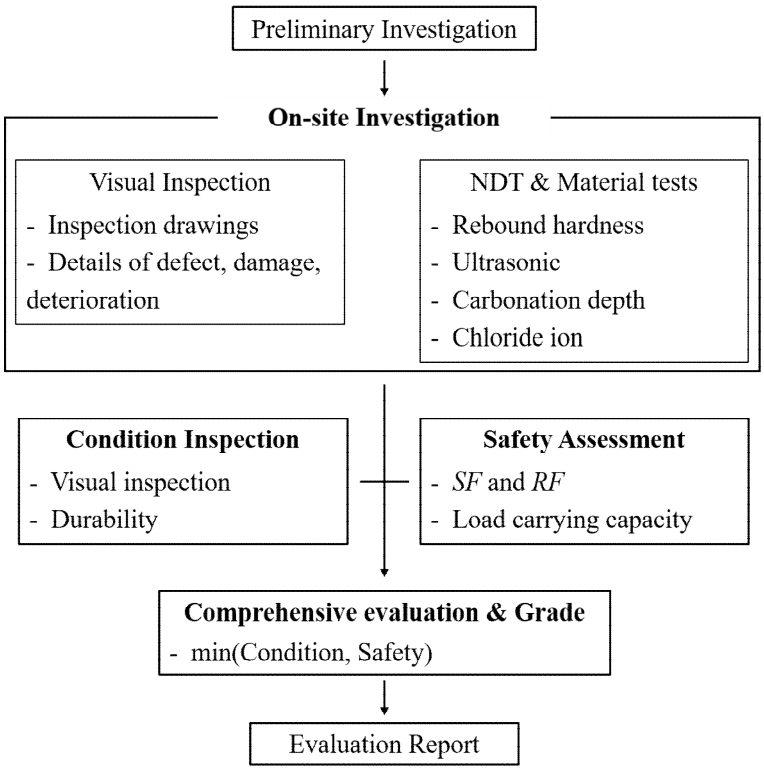


**Figure 4.1 Current flow chart of Full Safety Diagnosis (basic task)**

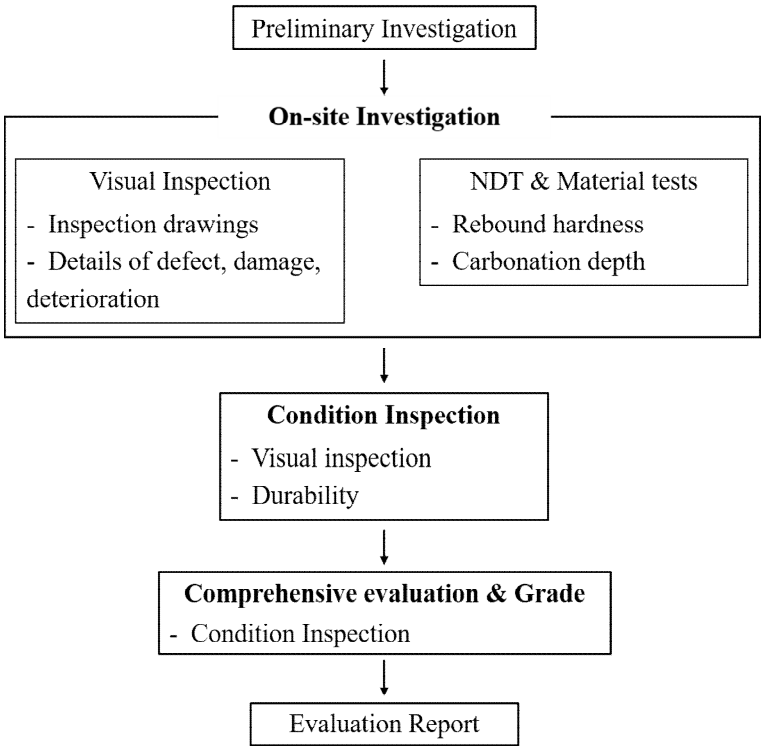


**Figure 4.2 Current flow chart of Full Safety Examination (basic task)**

However, as a result of analyzing the Korean and foreign bridge evaluation guidelines and various evaluation reports of existing bridges, and experimentally evaluating the actual material and structural performance of the members from decommissioned concrete bridges, the current Korean bridge evaluation method was judged to be ineffective.

Therefore, a bridge evaluation method for the existing concrete bridges was presented in order to improve the efficiency of the bridge evaluation in Figure 4.3. The visual inspection and rebound hardness test for durability is performed regularly to inspect the current condition of the bridge. And if the grade of condition inspection is C or higher, the bridge performance is evaluated as satisfactory to meet the required level and an evaluation report is prepared.

However, if severe damage or deterioration is investigated in the condition inspection, more detailed evaluation methods, such as additional NDT, material tests, safety assessment, and loading test, are carried out to investigated the problem.

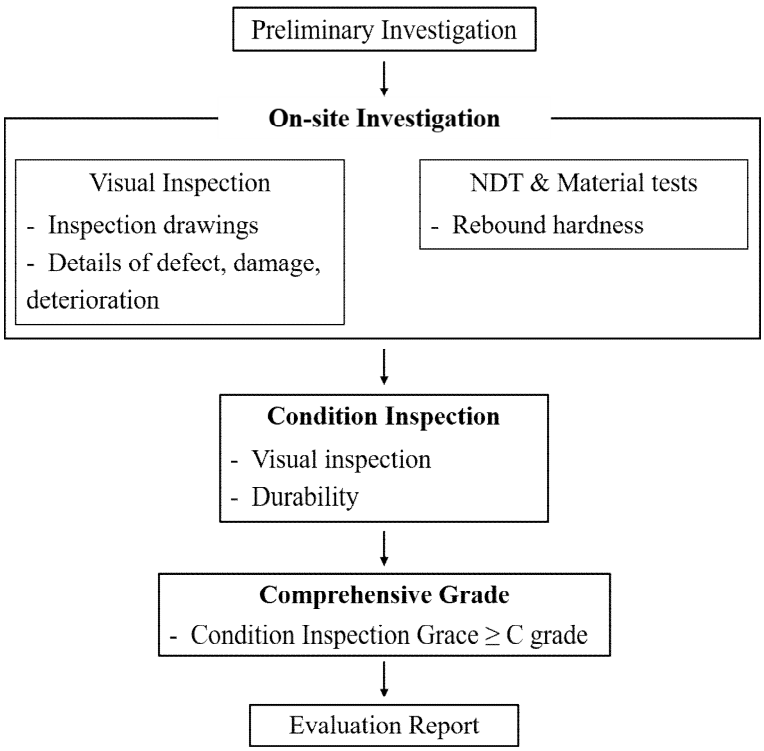


**Figure 4.3 Proposed flow chart of bridge evaluation (basic task)**

# 5. Conclusions

## 5.1 Comparison of Bridge Evaluation Guidelines

By comparing the bridge evaluation guidelines for bridges in Korea, the US, Canada, the UK, and Japan, the level of the evaluation for the existing concrete bridges in Korea compared to other countries was analyzed. The analysis was divided into condition inspection (visual inspection, NDT, material tests), safety assessment (safety factor, rating factor), loading test, and grade.

In all countries, the basic level condition inspection through visual inspection is carried out every 2 to 5 years. The current condition of the aged bridges is investigated through physical inspection methods, such as hammering and chain dragging, in other countries. On the other hand, unlike Korea, where NDT and material tests are conducted regularly, whether or not to perform, and the types of test are determined according to the external condition of the existing bridges in foreign countries.

The safety assessment that evaluates the structural safety of the aged concrete bridge members is performed regularly in Full Safety Diagnosis in Korea every 4 to 6 years. However, as with the NDT and material test, it was determined whether or not to carry out the safety assessment according to the engineer's judgment who performed the bridge evaluation based on the condition of the bridge in foreign countries. The assessment is being carried out in cases where the bridge's structural performance is suspected to be deteriorated due to severe damage and deterioration or when a structural check is required due to an increase of live load. Although Korea regularly evaluates the safety factor of the aged bridge members through

structural calculations, the characteristics of the members are not reflected in the calculation. Since material tests such as the concrete core compression test are performed only in minimal cases, most evaluations calculated the member strength by applying the design material strength. Also, when calculating the load effects due to dead and live loads, the same load and load factors are the design standard. On the other hand, foreign safety assessment guidelines provide regulations to calculate the member strength or load effects by considering the characteristics of the existing bridges. For example, condition factors to consider the exterior condition of the bridge members and reduced live load factors in consideration of the reduced variability compared to the design process are suggested in US AASHTO MBE.

The loading test is stipulated to be performed when necessary in all countries, including Korea. The test could directly measure the actual response of the bridge by applying a specific vehicle load to the old bridge. This loading test has the advantage of evaluating the load carrying capacity of the bridge by reflecting the measured response. However, to carry out the loading test, traffic control causes inconvenience, and there are disadvantages in that considerable cost and labor are required. Therefore, the Korean guideline suggests the necessary regulations for carrying out the loading test, such as when the safety factor by structural calculation is less than 1.0.

Finally, to efficiently manage the status and safety level of the existing bridges in each country, grades are rated according to the results of the bridge evaluation. For example, in Korea, the lower grade of the condition inspection and safety assessment grade is selected as the comprehensive grade of the bridge, and a maintenance plan is established accordingly. In foreign countries, only the

condition inspection is performed regularly, so the grade is rated only according to the inspection result. If the structural safety of the bridge is insufficient, a repair or strengthening plan or load posting plan are taken.

## 5.2 Actual Cases of Bridge Evaluation

It obtained and analyzed bridge evaluation reports written in Korea, the United States, and France to figure out how the actual bridge evaluation has been carried out. The cases of actual bridge evaluation include statistical data on the deterioration of highway bridges in Korea, bridge evaluation reports in Seoul, performance assessment reports conducted by KLLBC, and bridge evaluation reports in the US and France.

The statistical data on damage and deterioration of highway bridges in Korea were analyzed to determine which members of concrete bridges frequently deteriorated in service. The problem occurring to auxiliary members such as expansion joints, pavement, and bearing accounted for 73 % of the total fault, indicating that the member's frequency of damage and is higher than that of primary structural members such as beam, slab, and girder. Moreover, the frequency of the members with severe fault below the condition inspection grade 'd' was in the order of expansion joints, pavements, drainage, supports, and decks, and it was found that the fault to auxiliary members was also severe.

Of the 230 bridges managed by the Seoul Metropolitan Government, 29 bridges could secure bridge evaluation reports. Among them, a detailed analysis was performed on bridges where NDT (6 ea) and material test (4 ea) history review is possible and bridges where safety assessment results (13 ea) could be compared

with each national guideline. In addition, seven performance reports conducted by KLLBC were added to compare the safety factor and rating factor according to domestic and foreign guidelines.

As a result of the analysis, it was not possible to figure out the change in condition and durability of concrete bridges using the current NDT and material testing methods in Korea. Although the tests have been regularly performed, the location selection of test execution is not based on engineering judgement, and meaningful results could not be drawn to the lack of detailed records of the test results.

As described in Chapter 5.1, the Korean guideline always evaluates bridge's structural safety at the same level as the design standard. Therefore, according to the safety assessment regulations of Korea, the rated results were conservative compared to foreign safety factors and rating factors.

Thirdly, as a result of examining the execution history of the loading test for concrete bridges in Korea, it was found that the loading test had been conducted regardless of the bridge's condition and calculated structural safety performance, contrary to the regulations of the current Detailed Guideline. Most of the loading test results were only used to confirm the proper condition of the bridge. Moreover, for some bridges, even though the test showed a more considerable deflection value than the structural analysis, the load carrying capacity to which the response adjustment factor was significantly exceeded the design live load. It was judged that the effectiveness of the loading test is low if the condition of the bridge is not poor.

Finally, bridge evaluation reports in the US and France were analyzed. By comparing the domestic and foreign evaluation guidelines, one could understand

that only a brief bridge evaluation is performed in foreign countries. However, if severe damage or deterioration is investigated in the regular inspection, additional tests such as extra NDT, material tests, structural analysis, and loading tests were performed. The extra test items were selected and performed to determine the degree and cause of damage and deterioration found in the condition inspection in detail.

## 5.3 Test Results of Decommissioned Bridge Members

For the in-serviced concrete bridges, the concrete core compression test is performed only in a small amount in a limited range. Moreover, the experimental evaluation of the actual member strength of the aged bridges could not be confirmed unless the bridge is demolished. In Korea, since structural test studies have not been conducted on the members of the old concrete bridges, it was not possible to ascertain what level of structural safety calculated according to the current Detailed Guideline evaluates the safety of the concrete bridges.

In this study, to figure out the actual structural performance of the old concrete bridge members, material tests and structural tests in the laboratory were conducted on the members from decommissioned bridges after the several decades of service years. The specimens of the concrete core, tensile reinforcing bars, and PS wires were extracted from the test members without any limitation. As a result of the material test, the average concrete compressive strength and tensile strength of reinforcing bars and PS wires were all evaluated to be above the design strength. The core specimens from the RC deck of PSC-I composite girder bridges showed much higher compressive strength despite relatively more damage and

deterioration than the girder members. Furthermore, the compressive strength estimated by the rebound hardness and ultrasonic testing performed on the same core specimen as the core compression test showed different results regardless of the types of bridge, member, and NDT. Therefore, the current NDT method could not obtain concrete compressive strength with high accuracy. And the core compression test data acquired from the aged concrete members showed higher statistical dispersion than the 28-days core compression test data. Thus, if we need reliable concrete strength in a specific area, it is necessary to perform a compression test with core specimens taken from the relevant area.

And in the structural test in the laboratory, all of the members with yielding or flexural failure showed actual flexural strength that exceeded the nominal strength calculated by material design strength and test strength and ductile behavior occurred. For example, the measured flexural strength of two RC slabs and PSC girder specimens were 1.28, 1.10, and 1.20 times higher than the nominal flexural strength, respectively. This adequate strength measured in the test indicates that the cross-section loss or bonding degradation of reinforcing bars and PS steels did not occur even after decades. Especially, the Mojeon and the Sansung-Woochun bridge were classified as out-of-class facilities in service, so there had not been regular bridge evaluation and maintenance to the bridges. Nevertheless, it was confirmed that sufficient flexural strength and ductile behavior were exhibited in the bending tests.

However, the PSC-I girder specimens' crack load and flexural were much lower than that of structural analysis. So it was judged that the remaining effective prestressing force of the specimens was lower than the effective PS force calculated by the Korean design codes. However, no flexural cracks were found in

the bottom of the girders during the visual inspection while conducted in service, and no excessive deflection was measured in the loading tests. Therefore, it's presumed that the additional prestressing loss occurred during the bridge demolition and transport of the specimens.

Finally, the deflection response ratio of the static loading test according to the modulus of elasticity evaluated in the concrete core compression tests was comparatively analyzed. The deflection value according to the elastic modulus of concrete obtained by applying the design compressive strength and the average core compressive strength was compared. Structural analysis deflection values of the loading test according to the kinds of elastic modulus were similar. It was confirmed that even if the elastic modulus by the core test was applied, it did not affect the change in the deflection response ratio to 1.0 or more or less. Therefore, if the exterior condition of the bridge is good (condition inspection grade is 'C' or higher), it is reasonable to calculate the deflection value of the static loading test by applying the material design strength.

## 5.4 Proposal of an Efficient Bridge Evaluation and its Necessity

An efficient concrete bridge evaluation process was proposed by comparing of Korean and foreign bridge evaluation guidelines, analyzing actual bridge evaluation cases, and analysis of the results of material and structural performed on the members of demolished bridges.

Contrary to the current Detailed Guideline, only the condition inspection by

visual inspection and rebound hardness test is performed regularly for the existing bridges without distinguishing between Full Safety Diagnosis and Full Safety Examination. Through this evaluation, the current condition of the old concrete bridge is investigated, and changes in condition are tracked and managed. In addition to the exterior investigation, the durability of concrete cover is quantitatively compared and evaluated by comparing the compressive strength of the sound and non-sound area through a rebound hardness test.

Suppose severe damage or deterioration is found in the visual inspection and rebound hardness test. In that case, the discovered faults are to be investigated in detail, and additional NDT and material test are to be performed to determine the cause and degree. As seen from the statistical data on damage and deterioration of highway bridges in Korea, most faults occur in the auxiliary members. Therefore, even if severe deterioration happened in the members, the bridge's structural safety might not be degraded. However, if the severe damage and deterioration occurred in primary structural members such as RC beams and PSC girders, and there is a risk of deterioration to reinforcing bars and PS steels inside the member, the safety assessment should be conducted.

In the case of the United States and Japan, where a considerable of bridges in service have been aged more than 50 years, performance degradation due to aging has already happened, resulting in substantial maintenance costs, and an inconvenience due to traffic restrictions and even collapse accidents. In the case of Korea, where the proportion of bridges with a service year of 30 years or more has been increasing recently, the aging of bridges would progress significantly in 20 to 30 years, similar to that of the developed countries. To not follow the same wake as in the US and Japan, it is necessary to establish a practical bridge evaluation and

maintenance system. There is nothing wrong with performing various evaluation methods compared to other countries. However, limited budget and labor could be inefficiently consumed by performing unnecessary evaluation methods, and even the performance of the old bridges could not be appropriately evaluated. Through regular and basic condition inspection methods, it could be effective concrete bridge evaluation by closely tracking changes in the condition and performing additional investigations and tests in case of severe damage or deterioration found.

# Reference


1. AASHTO, *AASHTO LRFD Bridge Design Specifications 8th*. 2017, American Association of State Highway Transportation Officials
2. ASCE, *2021 Infrastructure Report Card*. 2021, American Society of Civil Engineers.
3. CSA, *Canadian Highway Bridge Design Code S6-14*. 2014, Canadian Standards Association. p. 894.
4. FHWA, *Bridge Inspector's Reference Manual*. 2012, Federal Highway Administration p. 2004.
5. FHWA, *Recording and Coding Guide for the Structure Inventory and Appraisal of the Nation's Bridges*. 1995, Federal Highway Administration. p. 124.
6. Highways England, *CS 450 Inspection of highway structures*. 2020. p. 139.
7. Highways England, *CS 454 Assessment of highway bridges and structures*. 2020. p. 125.
8. Highways England, *CS 455 The assessment of concrete highway bridges and structures*. 2020. p. 104.
9. Highways England, *CS 463 Load testing for bridge assessment*. 2020. p. 16.
10. International, T.Y.L., *Theodore Roosevelt Memorial Bridge Preliminary and Final Design*. 2015.
11. JRA, *Specifications for Highway Bridges*. 2012, Japan Road Association.
12. JSCE, *Standard Specifications for Concrete Structures - 2007 "Maintenance"*. 2007, Japan Society of Civil Engineers. p. 309.

13. MASTERS, M.a., *BR 1200 (Main) 2016 Bridge Inventory*. 2016.

14. MLIT, *Road Maintenance in Japan: Problems and Solutions*. 2013, Ministry of Land, Infrastructure, Transport and Tourism.

15. Tamakoshi, T. and K. Nakasu. *Current status of bridge management in Japan*. in *US-JAPAN Bridge Workshop*. 2004.

16. Transportation, O.M.o., *Ontario Structure Inspection Manual*. 2008, Ontario Ministry of Transportation. p. 394.

17. VDOT *Bridge inspection Definitions*.

18. 國土交通省道路局, *道路橋定期点檢要領*. 2019.

19. MOCT, *Special Act on the Safety Control of Public Structures*. 1995. (in Korean)

20. MOLIT, *Special Act on the Safety Control and Maintenance of Establishments*. 2018. (in Korean)

21. MOCT, *Development of the Improved Diagnostic System and Repair Techniques of Bridges*. 1996. (in Korean)

22. MOCT, *Bridge Safety Evaluation and Development of Load Carrying Capacity Rating System*. 1990. (in Korean)

23. MOLIT, *A Practical Manual of Load Carrying Capacity of Road Bridges*. 2002. (in Korean)

24. MOCT, KISTEC, *Safety Examination and Full Safety Diagnosis Detailed Guidelines*. 1996. (in Korean)

25. Kyung, Lee, Lee, *Analysis of Load Carrying Capacity of Bridges Based on Field Data with Serviced Time,* Journal of the Korean Society of Civil Engineers, 2015. **35**(1): p. 8. (in Korean)

26. Koo, Shin, Lee, *An Improvement for Determining Response Modification*

*Factor in Bridge Load Rating.* Journal of the Korea Institute for Structural Maintenance and Inspection, 2001. **5**(1): p. 7. (in Korean)

27. KATS, *KS F 2730 : Testing method for rebound number to conclude compressive strength of concrete*. 2008. (in Korean)

28. KATS, *KS F 2731 : Testing method for velocity of ultrasonic pulses to conclude compressive strength of concrete*. 2008. (in Korean0

29. KATS, *KS F 2596 : Method for measuring carbonation depth of concrete*. 2019. (in Korean)

30. KATS, *KS F 2713 : Standard test method for analysis chloride in concrete and concrete raw materials*. 2017. (in Korean)

31. MOLIT, *Yearbook of Road Bridge and Tunnel Statistics*. 2020: Sejong-si. p. 69. (in Korean)

32. MOLIT, KISTEC, *The Detailed Guideline for Safety and Maintenance Establishments of Facilities - Bridge*. 2019. (in Korean)

34. Kim, *Validity Analysis of the Performance Assessment Guideline for Existing Concrete Bridges*, in *Civil and Environmental Engineering*. Seoul National University: Seoul, 2019.

35. KECRI, *Improvement of Bridge Inspection System by the Damage Analysis*. 2013. (in Korean)

36. KECRI, *Bridge Maintenance Strategies for Service Life 100 years*. 2015. (in Korean)

37. Myongji University Industry and Cooperation Foundation, *Full Safety Diagnosis and Performance Assessment of Gunsunggang Bridge and Mojeon Bridge Report*. 2019. (in Korean)

38. Myongji University Industry and Cooperation Foundation, *Performance*

*Assessment of Bekksek-2 Bridge Report*. 2019. (in Korean)

39. Myongji University Industry and Cooperation Foundation, *Performance Assessment of Bugok Bridge Report*. 2019. (in Korean)

40. Myongji University Industry and Cooperation Foundation, *Performance Assessment of Agame Bridge Report*. 2019. (in Korean)

41. Myongji University Industry and Cooperation Foundation, *Performance Assessment of Maji-2 Bridge Report*. 2019. (in Korean)

42. Myongji University Industry and Cooperation Foundation, *Performance Assessment of Sansung-Woochun Bridge Report*. 2020. (in Korean)

43. Seoul Metropolitan Government, *https:/ /news.seoul.go.kr /safe/archives /52871,* 2017. (in Korean)

44. Oh, et al., *Improved Criteria for Condition Assessment of Bridges Based on Visual Inspection.* Journal of the Korea Institute for Structural Maintenance and Inspection, 2001. **5**(4): p. 9. (in Korean)

45. Oh, et al., *Verification of Load Test of Bridge for Rational Evaluation of Bridge Structures.* Journal of the Korean Society of Civil Engineers, 1996. **1**: p. 4. (in Korean)

46. Yoon, Shin, *Evaluation of Bridge Load Carrying Capacity of PSC Girder Bridge using Pseudo-Static Load Test,* Journal of the Korea Institute for Structural Maintenance and Inspection, 2019. **23**(4): p. 8. (in Korean)

47. Lee, Han, Shin, *The Examination of Load Carrying Capacity Based on Existing Data for Improved Safety Assessment Method for Expressway Bridges.* KSCE Journal of Civil and Environmental Engineering Research, 2009. **29**(6A): p. 10. (in Korean)

48. KICT, *Development of Safety Assessment Techniques using SI Method for*

*Bridges*. 2001. p. 269. (in Korean)

49. KISTEC, *Bridge Load Carrying Capaicty Evaluation Manual*. 2006. (in Korean)

50. Hwang, An, Kim, *A Feasibility Study of Loading Test for Safety Assessment.* Magazine of KSMI, 2011. **15**(6): p. 9. (in Korean)

# 국문 초록

## 폐교량 실험에 근거한 콘크리트교의 안전진단 방법 제안

교량은 준공 이후 시간이 경과함에 그 상태와 성능이 변화하게 된다. 노후화로 인해 교량의 사용성 및 내구성이 저하되며, 성능저하가 심각한 경우에는 붕괴와 같은 끔찍한 사고도 발생할 수 있다. 따라서 정기적인 안전진단을 통해 공용중 교량의 현재 성능을 평가하고 그 결과에 따른 보수 · 보강 조치로 교량 유지관리를 수행하고 있다.

한국의 콘크리트교량 안전진단은 외관조사, 비파괴시험, 재료시험, 구조해석 및 차량재하시험 등의 다양한 방법으로 공용중 교량의 현재 성능을 평가하고 있다. 하지만 이는 노후 콘크리트교량의 성능을 간접적으로 평가하므로, 실제 성능은 정확히 알 수 없다.

이 연구는 한국의 현행 콘크리트교 안전진단 방법이 노후교량의 실제 성능을 어떻게 평가하고 있는지를 검증하기 위해 시작되었다. 이를 위해 먼저 현행 안전진단 지침을 외국과 비교하여 그 수준을 파악하고, 실교량 안전진단 사례를 분석하여 실제 안전진단이 어떻게 수행되고 있는지를 분석하였다. 그리고 수십년의 공용년수가 지난 콘크리트교량의 철거 이후 확보한 부재를 대상으로 재료시험 및 실내 구조실험을 수행하여 실제 재료 및 부재 강도를 실험적으로 평가하였다.

국내외 안전진단 지침을 비교하고 실교량 안전진단 사례를 분석한

결과, 한국은 외국에 비하여 다양한 안전진단 방법을 정기적으로 수행하고 있지만, 그 효율성은 높지 않은 것으로 확인되었다. 철거교량 부재를 대상으로 수행된 재료시험과 구조실험에서 노후 콘크리트교의 실제 재료 강도와 부재 휨강도 모두 설계 강도 이상을 보이는 것을 알 수 있었다. 실험 대상 부재들은 철거 전 외관조사에서 c등급 이상으로 상태가 양호하였다. 따라서 실험 대상 교량과 같이 공용중 외관 상태가 양호한 경우에는 설계기준 강도로 안전 측의 안전성평가가 가능하였다.

연구 결과에 근거하여 기존 콘크리트교량 안전진단의 실효성을 높이는 개선안을 제시하였다. 정기적으로 수행되는 기본 안전진단에서는 상태평가(외관조사, 반발경도 시험)만을 수행하며, 이를 통해 교량의 현 상태와 변화를 조사하고 추적한다. 정기 안전진단에서 심각한 손상 및 열화가 발견되면 그 정도와 원인을 파악하기 위한 추가 비파괴시험 및 재료시험을 수행하도록 한다. 그리고 구조성능 저하가 의심된다면 교량의 현재 상태를 반영한 안전성평가를 수행하며, 구조계산에 의해서도 안전성이 불충분한 것으로 판단된 경우에는 재하시험을 통해 교량의 실제 응답을 평가하도록 한다. 점차 노후교량의 비율이 증가하는 현 시점에서, 제시된 안전진단 방법은 효율적인 교량 안전진단을 수행하는데 도움이 될 수 있다고 생각한다.

**주요어 :** 공용중 콘크리트교량, 안전진단, 철거교량 부재 실험, 상태평가, 안전성평가

**학 번 :** 2015-21304