치의과학박사 학위논문

Effect of the Hemispherical Dimples at Titanium Implant Abutments for the Retention of Cemented Crowns

시멘트 유지형 임플란트 보철 수복물에서 티타늄 임플란트 지대주의 반구형 딤플의 유지력 효과

2022 년 8 월

서울대학교 대학원

치의과학과 치과보철학 전공

최 정 훈

Effect of the Hemispherical Dimples at Titanium Implant Abutments for the Retention of Cemented Crowns

지도교수 허 성 주

이 논문을 최정훈 박사학위논문으로 제출함

2022 년 8 월

서울대학교 대학원

치의과학과 치과보철학 전공

최 정 훈

최정훈의 박사학위논문을 인준함

2022 년 8 월

Chair	곽 재 영	(Seal)
Vice Chair	허 성 주	(Seal)
Examiner	김 성 균	(Seal)
Examiner	안 진 수	(Seal)
Examiner	권 긍 록	(Seal)

Effect of the Hemispherical Dimples at Titanium Implant Abutments for the Retention of Cemented Crowns

2022

Jung-Hoon Choi, D.D.S., M.S.D

Department of Prosthodontics, Graduate School, Seoul National University

*(Directed by Professor **Seong-Joo Heo**, D.D.S., M.S.D., Ph.D.)*

Abstract

Effect of the Hemispherical Dimples at Titanium Implant Abutments for the Retention of Cemented Crowns

Jung-Hoon Choi, D.D.S., M.S.D

Department of Prosthodontics, Graduate School, Seoul National University

(Directed by Professor Seong-Joo Heo, D.D.S., M.S.D., Ph.D.)

Purpose: To evaluate the effect of dimple structures on the retention of cobalt–chromium (Co–Cr) crowns cemented to titanium abutments, with different heights and numbers of dimples on the axial walls. The null hypothesis was that there would be no difference in the mean retention force when the dimple shape was used on the axial wall of the titanium abutment for the cement-retained implant prosthesis.

Materials and methods: A total of 180 specimens were divided into 12 groups (n = 15). Titanium implant abutments (Warentec, Seoul, Korea) with heights of 3.0 and 6.0 mm and a convergence angle of 6.0 degrees were manufactured using a computer-aided manufacturing milling machine. The experimental group was divided into a group in which two dimples were placed on opposite sides of the abutment wall, and a group in which four dimples were placed on the abutment wall at equal distances. The dimple was an indented hemispherical shape with a diameter of 1.5 mm and depth of 0.75 mm. The dimples were positioned 1.0 mm above the gingival margin of the abutments.

Titanium abutments of 3.0 mm and 6.0 mm length were scanned using an E4 scanner (3Shape, Copenhagen, Denmark). The implant prosthesis was designed on the Exocad program (GmbH, Darmstadt, Germany). The cementation gaps were equally applied at 50 μm. A 5.0 mm wide ring-shaped structure was designed on top of the crowns for the pull-out test. The cobalt-chromium (Co-Cr) alloy crowns were manufactured by laser sintering using EOSINT M270 laser sintering machine (EOS GmbH Electro Optical Systems, Krailling, Germany). The crowns were polished by a traditional method, and the inner surface was sandblasted with 50 μm alumina under 4.0 bar for 5 seconds.

The implant analogs from the same manufacturer (Warentec, Seoul, Korea) were embedded in an acrylic resin block. The abutment was fixed with titanium screws by the manufacturer's recommended torque value of 30 N/cm. Cotton pallets were inserted above the titanium screw, and the rest of the gap was filled up to the top of the abutment using Fermit (Ivoclar Vivadent AG, Schaan, Switzerland) and light-cured for 20 seconds.

Two types of cements were used in the experiment: TempBond (Kerr, Salerno, Italy), a zinc oxide–eugenol–based cement, and Panavia F2.0 (Kuraray, Fujimoto, Japan), a resin-based cement. The cemented specimen was subjected to 5 kg of load for 10 minutes, and excess cement was removed using a dental explorer. Thermal treatment was then applied to simulate the temperature change in the oral environment. The specimens were repeatedly immersed in a cold and hot water bath at 5 °C and 55 °C for 30 seconds each, up to total of 10,000 cycles.

Universal testing machine (TW-D102, Tae-Won Tech CO., Seoul, Korea) equipment was used for the pull-out test. The specimens were clamped and the hook of the testing machine was connected to the upper crown. Uniaxial tension with a loading speed of 5.0mm/min was applied. The amount of force to dislodge the crown from the abutment was recorded.

For all recorded data, satisfaction with normal distribution ($\alpha = 0.05$) was first tested using the SPSS program (IBM SPSS Inc., Chicago, IL, USA), followed by two-way ANOVA test and post-hoc Tukey HSD test. Statistical analysis was performed to determine whether there was a difference in retention force depending on the change of the length of the abutment and the presence or absence of dimples on the axial walls.

Results: Results of a two-way analysis of variance test showed a statistically significant difference in retention force due to the change of the length of the implant abutment and the formation of dimples, regardless of the types of adhesives used (P <.001). A significantly higher mean retention force was observed in the groups with dimples than in the control group, using the post hoc Tukey honestly significant difference test (P <.001). When compared between groups with the same number of dimples, a statistically significant increase in the mean force of retention was observed, where the length of the abutment changed from 3.0 to 6.0 mm (P <.001).

As for the fracture modes of cements in the groups without dimples, most of the cement residues were observed on the intaglio surface of the crown implying adhesive failure. For the groups with dimples, a combination of adhesive failure on the intaglio surface of the crown and cohesive failure on the dimples of the abutment denoting mixed failure of cement.

Conclusions: The null hypothesis was rejected, and the following conclusions could be drawn within the limitations of this study:

1. The rate of increase in the mean retention force for the abutment height change was higher than the use of dimples regardless of cement types.

2. TempBond-cemented crowns to 3.0-mm abutments with four dimples showed significantly higher retentive force compared to abutments with no dimple. Two dimples on 3.0-mm abutments showed no significant difference compared to abutments with no dimple by TempBond cementation.

3. Panavia F2.0-cemented crowns to 6.0-mm abutments with two and four dimples showed significantly higher retentive force compared to abutments with no dimple. Two and four dimples on 6.0-mm abutments showed no significant difference between each other by Panavia F2.0 cementation.

Keywords : dental implant, implant prosthesis, implant abutment, retentive force

Student Number : 2020-33414

CONTENTS

I. INTRODUCTION……..……....1

II. MATERIALS AND METHODS……..……....5

1. Abutment fabrication……...5
2. Study groups……7
3. Dimple design……..8
   3-1. Groups with two dimples……9
   3-2. Groups with four dimples……9
4. Crown fabrication……..10
   4-1. Abutment scan……..10
   4-2. Crown design……11
   4-3. Laser sintering of crowns……..12
5. Laboratory analog……..13
6. Cementation process……..14
7. Thermocycling……...14
8. Pull-out test for measurement of retentive forces..15
9. Statistical analysis……..18

III. RESULTS……...19

1. Measurement of retentive forces…….……...19
2. Effect of dimples…….……21
3. Effect of abutment height…….…...26
4. Relationship between number of dimples and abutment heights……28
5. Failure modes of cement.....…….....31

IV. DISCUSSION…….34

V. CONCLUSIONS…….38

REFERENCES……....39

SUPPLEMENTS……..45

ABSTRACT IN KOREAN……..48

I. INTRODUCTION

Dental implants are widely used clinical options for restoring regions of missing dentition.[1–3] For functional and esthetic prosthetic restoration, the placement of implant fixtures in the optimal position is very important.[4–6] There are two connection types in dental implant prostheses. The screw-retained type connects the implant fixture and the upper prosthesis using only abutment screws, whereas the cement-retained type connects the abutment to the implant fixture using screws and cements the superstructure.[7]

Screw-retained implant prostheses have numerous advantages over cement-retained implant prostheses. Screw-retained implant prostheses have better retrievability than the cement-retained types because there are abutment screw access holes.[8] These holes make retrieving the superstructure of dental implants accessible by clinicians when needed for hygienic maintenance, repair, or adjustments extraorally. Moreover, if the interocclusal distance is limited or as little as 4.0 mm in height, a screw-retained prosthesis is more favorable because of its direct connection to the fixture without an intermediate abutment.[9] Another benefit of a screw-retained implant prosthesis is that there is no residual cements between the implant-supported crowns and abutments. If the margin of the cement-retained prosthesis of dental implants is greater than 2.0 mm in depth subgingivally, it is extremely difficult to completely remove the excess cement around the abutment.[10] This poses a major risk for maintaining healthy peri-implant tissue, which may develop into peri-implantitis if left unremoved for years.[11]

On the other hand, cement-retained implant prostheses have several advantages compared with screw-retained types. The cement-retained implant-supported crowns are retrievable with provisional cementation and the excess cement is removed easily.[12,13] Compared to screw-retained types, the cement-retained types require less complex laboratory and clinical procedures.[14] In terms of esthetic aspects, cement-retained prostheses are more favorable for duplicating the anatomical tooth structure, due to the lack of screw access hole.[15]

With regard to cement-retained implant-supported crowns, previous studies have assessed improvements in the retention of the superstructure crowns to the abutments by using different types of bonding agents, abutment surface treatments, and modifications. Researchers have suggested that the retentive force is variable for cement-retained crowns depending on the type of provisional luting agent used. Farzin et al. reported that for cast crowns, the force of retention was significantly improved by various types of temporary cements used. [16] Lopes et al. subsequently found that self-adhesive resin cement provided enhanced pull-out retentive force compared with provisional cement, such as RelyX Temp NE.[17] In addition to the role of luting agents, Jalil et al. insisted that the surface modification of the implant abutment may affect the retention between the abutment and the metal alloy crown.[18] Their experiments provided support for a weaker retentive force by sandblasted titanium abutments than a roughened surface by a cylindrical diamond bur. In contrast, the sandblasted implant abutments showed higher retention force than smooth-surface milled implant abutments did.[19]

The use of retention grooves was another method that had been suggested to improve the dislodging force between the implant abutment and the cement-retained implant-supported crowns. Badawi et al. showed that forming circumferential grooves on the implant abutments improved force of retention when cemented by provisional cement.[20] Furthermore, Lewinstein et al. experimented addition of circumferential grooves on the abutment effectively enhanced retention of cast crowns either with zinc phosphate or zinc oxide provisional cements.[21] Similar studies have been conducted in a tooth abutment to crown environment. Chan et al. reported that forming auxiliary grooves inside of the crown and the dentin abutment enhanced the retentive force compared to the control group with no auxiliary groove.[22] Likewise, O'Kray et al. proposed that the use of a single or two horizontally circumferential grooves inside the crown significantly increased the retentive force when the cemented cast metal crowns to the cobalt–chromium (Co–Cr) alloy die.[23]

However, the formation of multiple circumferential grooves on the abutment wall may be limited to a certain experimental environment. Unless prepared from the laboratory stage by a milling machine, placing an even-sized circumferential groove around the abutment at the clinical chairside with a rotary handpiece requires a high level of skill and precision. Furthermore, if the dimensions of the grooves are excessively deep or wider than the surface area of the implant abutment, the risk of losing a clear and stable path of insertion still exists. This, in turn, may jeopardize the proper seating of the superstructure crowns. The placement of multiple circumferential grooves may also be technically difficult depending on the types of materials used and can eventually lead to undesirable laboratory errors.

Although much research has been completed on abutment structures in terms of reinforcement of the retentive strength when cemented, only a few studies have investigated the creation of a specific shape of retentive modification on the axial wall of dental implant abutments. In this article, the relative retentive force to an indented shape formation on the implant abutment is evaluated. Specifically, this study aims to investigate the effect of change in force of retention of the cement-retained implant-supported crowns by forming hemisphere dimples on the axial walls of titanium abutments using various heights and cement types. The null hypothesis is that there will be no difference in the mean retentive force with the use of dimples on the titanium abutment wall in cement-retained implant-supported crowns.

II. MATERIALS AND METHODS

1. Abutment fabrication

Cylindrical-shaped internal-type abutments with a height of 3.0 or 6.0 mm (Warentec, Seoul, Korea) were designed (Figs. 1–a and 2-a). The total convergence angle of the tapered axial wall was 6.0 degrees regardless of the abutment height (Figs. 1 and 2). The designed cuff height was 3.0 mm. The diameter of the abutment was 5.5 mm with 2.5 mm wide screw access channel (Fig. 3). Every other condition, such as abutment emergence profile and surface treatment, remained identical, except for the total height of the abutment and the numbers of dimples positioned (Figs. 1 and 2). Each abutment was milled using a computer-aided manufacturing procedure from grade 5 titanium and remained as a machined-surface without any additional surface treatment procedure.

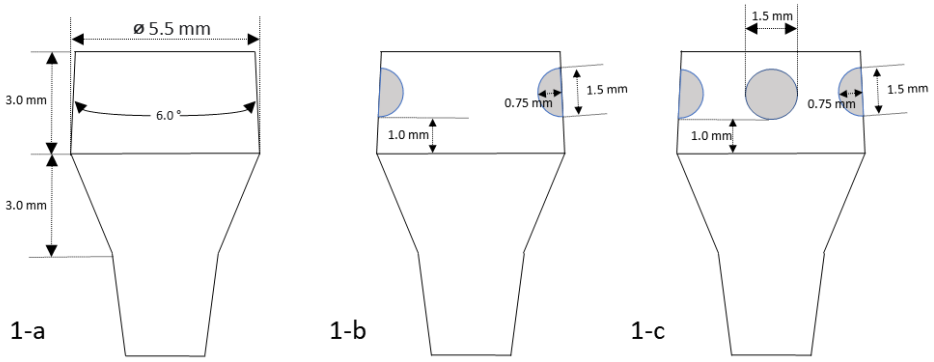

Figure 1. 3.0mm titanium abutment design from an axial view (1-a) no dimple (1-b) 2 dimples (1-c) 4 dimples group.

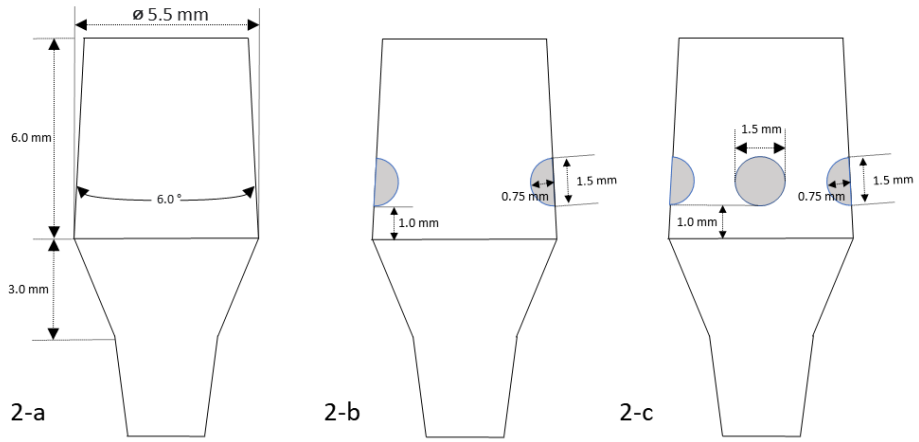

Figure 2. 6.0mm titanium abutment design from an axial view (2-a) no dimple (2-b) 2 dimples (2-c) 4 dimples group.

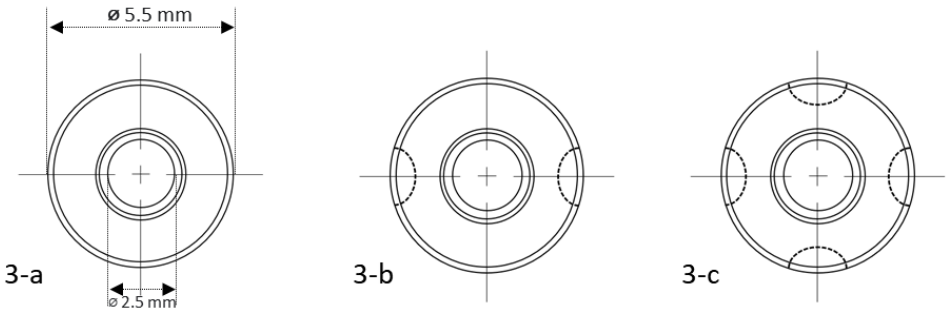

Figure 3. Titanium abutment design from an occlusal view (3-a) no dimple (3-b) 2 dimples (3-c) 4 dimples group.

2. Study groups

Twelve groups (n = 15) were prepared for this experiment, with a total of 180 titanium abutments. Of 180 titanium abutments, 90 abutments were 3.0 mm in height and the other 90 were 6.0 mm in height. The two types of cements used for this study were zinc oxide–eugenol cement TempBond (Kerr, Salerno, Italy) and self-etching resin cement Panavia F2.0 (Kuraray, Fujimoto, Japan).

In this study, the height of the abutment is abbreviated as "H," and the type of cement used is labeled "T" for TempBond or "P" for Panavia F2.0. The number of dimples placed is presented next to the type of cement used. The height of the abutment is mentioned first, followed by the type of cement used and the number of dimples. For example, if the tested group had abutments 3.0 mm in height and were cemented by TempBond with no dimple, the group was labeled as "H3-T0." If the tested abutment was 6.0 mm in height and cemented by Panavia F2.0 with 2 dimples, it was referred to as the "H6-P2" group. The remaining groups followed the same rules. The control groups were abutments with no dimples on the axial walls of the titanium abutments. Table 1 presents the study groups used in this study. As the height of the abutment is addressed first, followed by the number of dimples, the nomenclature for this type of abutment is preferably called "H-Dimple."

Table 1. Layout of the study groups for the experiment

	3.0mm height Ti-abutment		6.0mm height Ti-abutment	
Type of Cement / Number of Dimples	TempBond	Panavia F2.0	TempBond	Panavia F2.0
0	H3-T0	H3-P0	H6-T0	H6-P0
2	H3-T2	H3-P2	H6-T2	H6-P2
4	H3-T4	H3-P4	H6-T4	H6-P4

3. Dimple design

Considering the tapered convergence angle of the titanium abutment wall, the hemispherical dimple shape was designed perpendicular to the axial wall. The dimples were formed together as the titanium was milled at the same time. Each dimple had a diameter of 1.5 mm and a depth of 0.75 mm. For every abutment, the dimple was positioned 1.0 mm above the gingival margin line (Fig. 4). No additional surface treatment was applied after the milling process was completed.

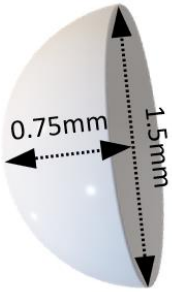

Figure 4. Hemispherical dimple dimensions; Diameter: 1.5mm, Depth: 0.75mm.

3-1. Groups with two dimples

For the groups with two dimples on the titanium abutments, the dimples were positioned at exactly 180 degrees opposite each other on the axial wall (Figs. 1-b, 2-b, and 3-b). The dimples were formed 1.0 mm above the gingival line. The dimension and position of dimples stayed the same throughout all abutments. The only difference was the length of the axial wall left above the dimples, depending on the total height of the abutments.

3-2. Groups with four dimples

The same hemispherical dimple size (1.5 mm wide and 0.75 mm deep) was designed and applied to the four-dimple groups. The vertical location of the dimples was placed equally 1.0 mm above the gingival margin of the abutments. For groups with four dimples on the titanium abutments, the dimples were positioned exactly 90 degrees away from each other on the axial wall (Figs. 1-c, 2-c, and 3-c).

4. Crown fabrication

4-1. Abutment scan

The abutment was digitally scanned using an E4 scanner (3Shape, Copenhagen, Denmark; Fig. 5). For the standardized intaglio surface of the crown, abutments from the control groups without any dimples were scanned. The scanned STL file was imported into the Exocad (GmbH, Darmstadt, Germany) software system to design the upper crown.

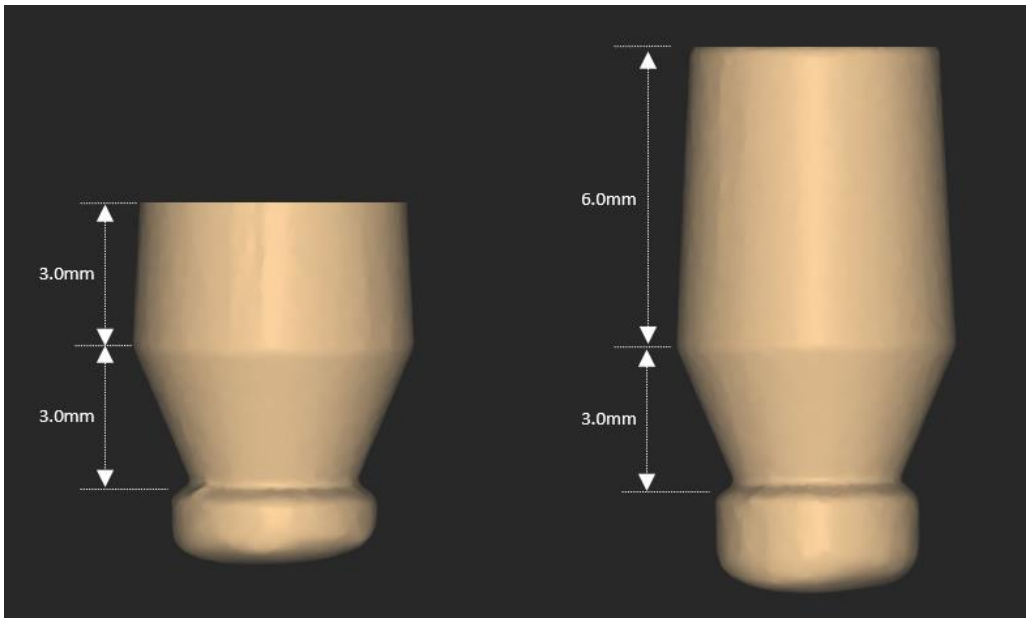

Figure 5. The scanned 3.0mm and 6.0mm abutment on Exocad (GmbH, Darmstadt, Germany) software program.

4-2. Crown design

As this experiment was designed for cement-retained implant-supported crowns, the upper prosthesis fully covered the axial walls of the titanium abutments without any access holes. The internal cementation gap was 50 μm. The crown was designed with a penetrated hole design (inner diameter: 5.0 mm) directly above the occlusal table to be pulled away from the cemented abutment (Fig. 6).

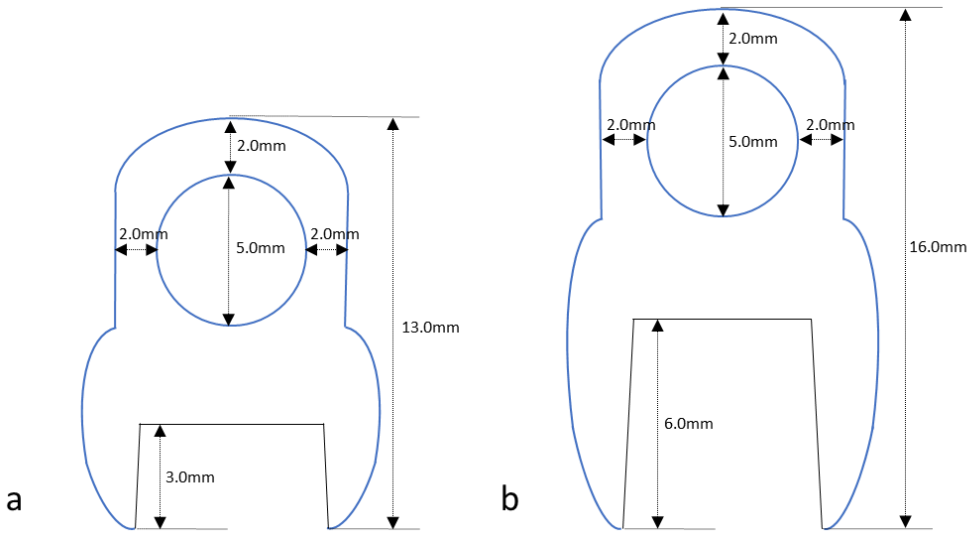

Figure 6. Penetrated hole design on top of the crown with 5.0mm diameter for (a) front view for 3.0mm abutment (b) front view for 6.0mm abutment.

4-3. Laser sintering of crowns

The manufacture of the prosthesis was proceeded by the direct Co–Cr laser sintering machine EOSINT M270 (EOS GmbH Electro Optical Systems, Krailling, Germany; Fig. 7). A conventional polishing procedure was performed, and the intaglio surface of the crown was sandblasted with 50 μm Al_2O_3 under 4.0 bar. The finished Co–Cr alloy crowns are shown in Fig. 8.

Figure 7. EOSINT M270 laser sintering machine (EOS GmbH Electro Optical Systems, Krailling, Germany).

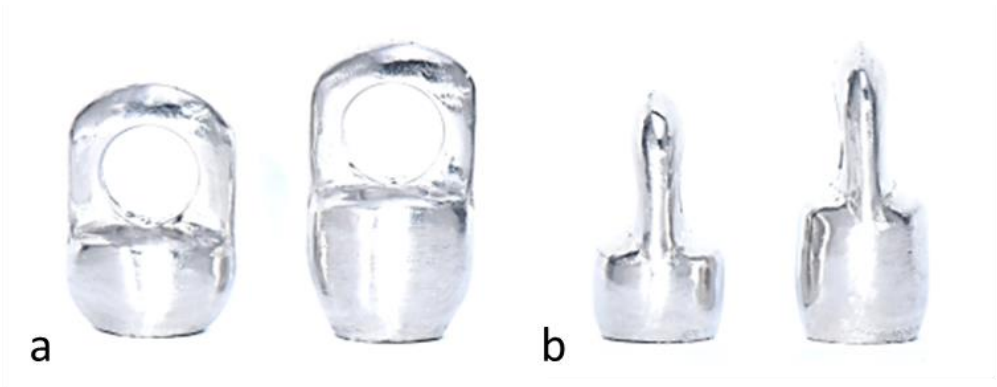

Figure 8. 3.0mm and 6.0mm Co-Cr alloy crowns in (a) front view and (b) side view.

5. Laboratory analog

A commercially available laboratory analog with a diameter of 4.3 mm and titanium abutment screws from the same manufacturer were used in this experiment (Fig. 9). The internal surface of the laboratory analog replicated a typical internal-type bone-level implant fixture. Each laboratory analog was embedded and fixed into an acrylic resin block.

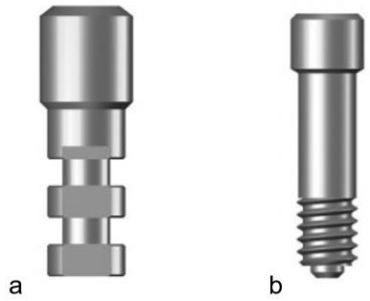

Figure 9. (a) internal-type laboratory analog and (b) titanium abutment screw.

Once the milling of the titanium abutment was completed, the abutment was seated to the laboratory analog, and the abutment screw was tightened to the laboratory analog for 30 N/cm, according to the manufacturer's instructions. The screw access channel was filled by cotton pallets directly over the abutment screw head. The rest of the gap was covered by Fermit (Ivoclar Vivadent AG, Schaan, Switzerland) and light-polymerized for 20 seconds.

6. Cementation process

Before cementation, the passive fit of each crown to the abutment was checked visually. The prepared Co–Cr alloy crowns were cemented by either TempBond (Kerr, Salerno, Italy) or Panavia F2.0 (Kuraray, Fujimoto, Japan) onto the titanium abutments. A thin layer of cement was applied evenly around the margin area of each crown. Each type of cement was prepared and hand-mixed according to the manufacturer's instructions. Finger pressure by a single operator was applied for 10 seconds of cementation. After 10 seconds, each specimen was pressed by a load of 5 kg for 10 minutes. The excess cements were then carefully removed by using a dental explorer.

7. Thermocycling

The cemented specimens were placed under a thermocycling environment, where they were submerged into cycles of a cold and hot bath for 30 seconds each. The temperature of the cold bath was 5 °C, whereas that of the hot bath was 55 °C (Fig. 10). The dwell time between each bath was 5 seconds. One cycle consisted of full submersion into the cold bath for 30 seconds, rest for 5 seconds, and hot bath for another 30 seconds. The tested specimens underwent a total of 10,000 cycles of thermocycling before the retentive force was measured.

Figure 10. Thermocycling machine for cold and hot bath.

8. Pull-out test for measurement of retentive forces

After thermocycling was complete, each specimen was gently dried with air and left under room temperature. The retentive force was measure by using a universal testing machine (TW-D102, Tae-Won Tech Co., Seoul, Korea; Fig. 11). The tensile load speed was set at 5.0 mm/min and kept constant until the upper prosthesis was completely dislodged from the cemented titanium abutment (Fig. 12). The penetrated hole of the upper prosthesis was hooked to the pulling compartment of the machine. The acrylic resin block, where laboratory analog was embedded and clamped into place by a lower grip holder (Figs. 13 and 14). A uniaxial pull-out load was applied, and the retentive strength value was recorded in Newtons.

Figure 11. Universal testing machine (TW-D102, Tae-Won Tech CO., Seoul, Korea).

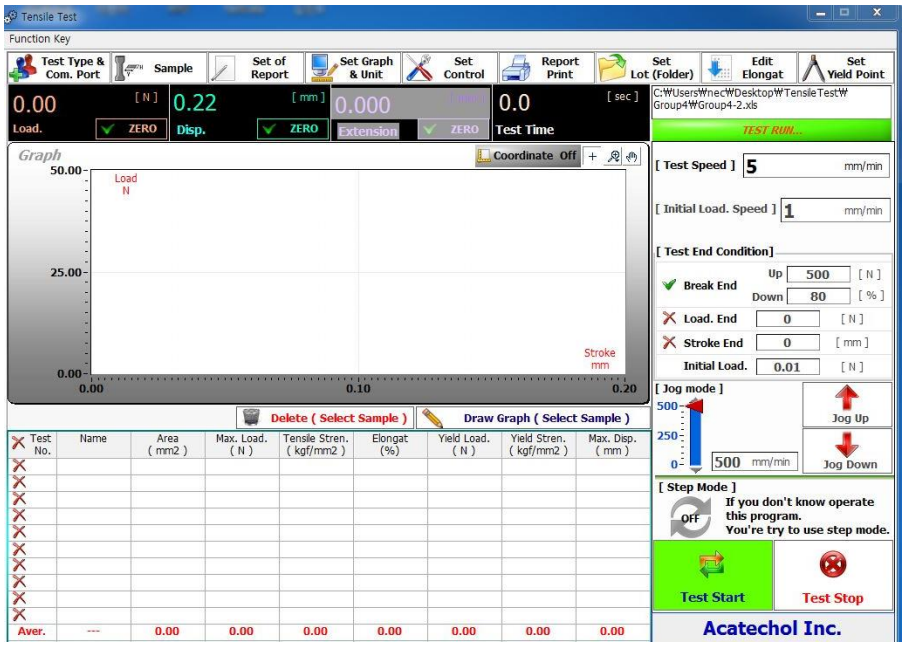

Figure 12. Retention test program linked to universal testing machine set-up.

Figure 13. Universal testing machine hooked to the crown before pull-out test.

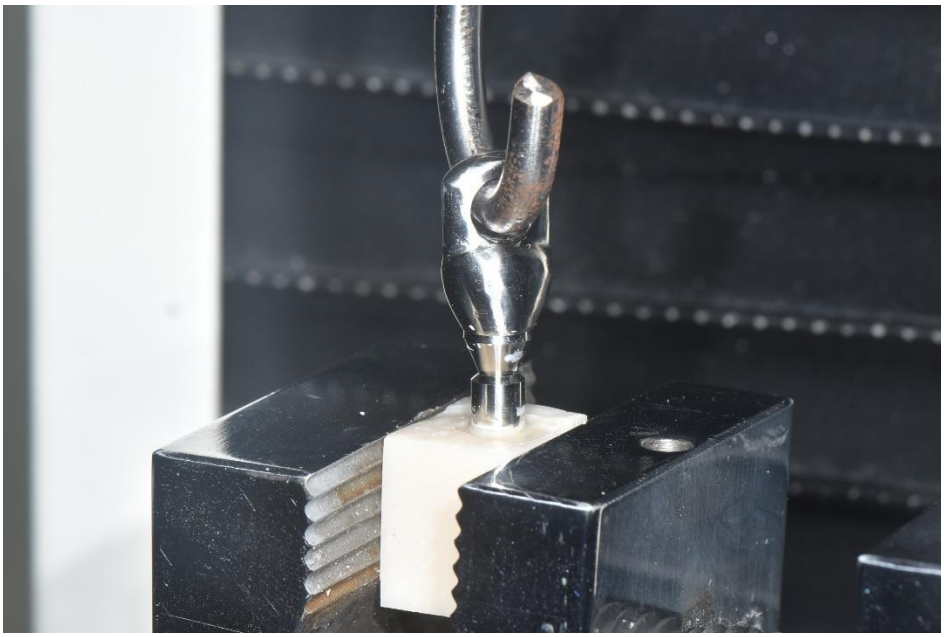

Figure 14. Completely dislodged crown after pull-out test.

9. Statistical analysis

A total of 180 experimental data were collected from 180 pull-out tests (Supplementary Table S1). The mean value for each group was calculated. The data were transferred to the Statistical Package for Social Sciences (SPSS) software version 25.0 (IBM SPSS Inc., Chicago, IL, USA). The data were aligned in the order of the different experimental variables, which included abutment height, number of dimples, and type of cement used. For the statistical analyses, a code book was created to convert the variables from words to numerical numbers (Fig. 15).

Code book		
		Coding
Height	3.0mm	1
	6.0mm	2
Cement	Temp-Bond	1
	Panavia F.	2
Dimple	0	1
	2	2
	4	3

Figure 15. Code book for variables' conversion to numbers.

With regard to the normality of the collected data, Shapiro–Wilk test was performed.[24] Once the normality was tested, a parametric two-way analysis of variance (ANOVA) was conducted to compare the mean force of retention according to the change in heights and number of dimples of the titanium abutments as well as their possible interaction effect.[25] The post hoc Tukey honestly significant difference (HSD) test was also conducted to determine the statistical significance within groups for multiple comparisons.[26] The significance level was set for .05 in all the tests conducted.

III. RESULTS

1. Measurement of mean retentive forces

The recorded mean retentive forces and standard deviation values for 12 groups are reported in Table 2. Under equal abutment conditions, the mean force of retention was greater for groups cemented by Panavia F2.0 than by TempBond. Of the 12 groups tested, the lowest mean retentive force was recorded for the H3-T0 group, where the 3.0-mm titanium abutment was cemented by TempBond without any dimples (81.49 ± 10.12 N). The highest mean force of retention was observed in the H6-P4 group, where the 6.0-mm titanium abutment was cemented by Panavia F2.0 with four dimples (649.62 ± 100.76 N).

Table 2. Mean force of retention and standard deviation for all groups (Newtons)

	3.0mm height Ti-abutment		6.0mm height Ti-abutment	
Type of Cement / Number of Dimples	TempBond	Panavia F2.0	TempBond	Panavia F2.0
0	H3-T0: 81.49±10.12	H3-P0: 279.43±56.00	H6-T0: 133.51±33.73	H6-P0: 432.15±91.39
2	H3-T2: 91.14±14.09	H3-P2: 351.17±85.88	H6-T2: 204.01±44.56	H6-P2: 574.65±71.52
4	H3-T4: 96.05±13.56	H3-P4: 402.49±70.31	H6-T4: 221.01±44.04	H6-P4: 649.62±100.76

The results of the normality test proved that data from all groups followed a normal distribution of retentive forces measured (P >.05; Table 3). Since the collected data satisfied normality test, further statistical analysis was proceeded.

Table 3. Results of Shapiro-Wilk test for normality

		Shapiro-Wilk		
	Group	Statistic	df	Sig.
Retention	H3-T0	.969	15	.843*
	H3-T2	.981	15	.975*
	H3-T4	.963	15	.739*
	H3-P0	.973	15	.900*
	H3-P2	.942	15	.411*
	H3-P4	.947	15	.473*
	H6-T0	.951	15	.536*
	H6-T2	.907	15	.122*
	H6-T4	.944	15	.442*
	H6-P0	.939	15	.365*
	H6-P2	.918	15	.180*
	H6-P4	.983	15	.985*

*. The mean difference is significant at the .05 level.

2. Effect of dimples

As the normality test was satisfied, one-way ANOVA and the post hoc Tukey HSD test was performed to determine the significance within the groups for multiple comparisons by each type of cement (Tables 4 and 5). The result of one-way ANOVA test indicated that use of dimples had significant effect in increasing retention force for both 3.0- and 6.0-mm abutments for TempBond groups ($P < .05$ and $P < .001$; Table 4).

Within the TempBond groups, the H3-T0 group showed no statistically significant difference from the H3-T2 group ($P > .05$), but the H3-T4 group had a significant increase in retention compared with the H3-T0 group ($P < .05$). Meanwhile, there was no statistical difference between the H3-T2 and H3-T4 groups ($P > .05$).

For the 6.0-mm abutments, the H6-T0 group had a statistically significant difference in mean retentive force as compared with both H6-T2 and H6-T4 groups ($P < .001$). However, no significant increase in the mean force of retention was seen in the H6-T4 group compared with the H6-T2 group ($P > .05$; Table 5). Therefore, it was evident that using two or four dimples was effective in improving the retention force compared with the no dimple groups for 6.0-mm abutments with TempBond. The box-plot graph illustrated below indicates the significant difference in retention force among TempBond groups (Fig. 16).

Table 4. One-way ANOVA test of dimple effects for TempBond groups

[TempBond]	Dimple			F	P-value
Abutment Height	0	2	4		
3	81.49(10.12)[b]	91.14(14.09)[ab]	96.05(13.56)[a]	5.098	<.05
6	133.51(33.73)[b]	204.01(44.56)[a]	221.01(44.04)[a]	20.512	<.001

Different lower-case letters indicate a significant difference among mean retentive force Mean(SD), a>b, Post-Hoc; Tukey

Table 5. Multiple comparison of variables with post-hoc Tukey HSD test; abutment height and number of dimples for TempBond groups

Cement	Height	Dimple		Sig.	95% Confidence Interval	
					Lower Bound	Upper Bound
[TempBond]	3mm	Dimple 0	Dimple2	0.106	-20.930	1.624
			Dimple 4	0.009	-25.844	-3.290
		Dimple 2	Dimple0	0.106	-1.624	20.930
			Dimple 4	0.545	-16.190	6.364
		Dimple 4	Dimple0	0.009	3.290	25.844
			Dimple2	0.545	-6.364	16.190
	6mm	Dimple 0	Dimple2	0.000	-105.689	-35.297
			Dimple 4	0.000	-122.696	-52.304
		Dimple 2	Dimple0	0.000	35.297	105.689
			Dimple 4	0.475	-52.203	18.189
		Dimple 4	Dimple0	0.000	52.304	122.696
			Dimple2	0.475	-18.189	52.203

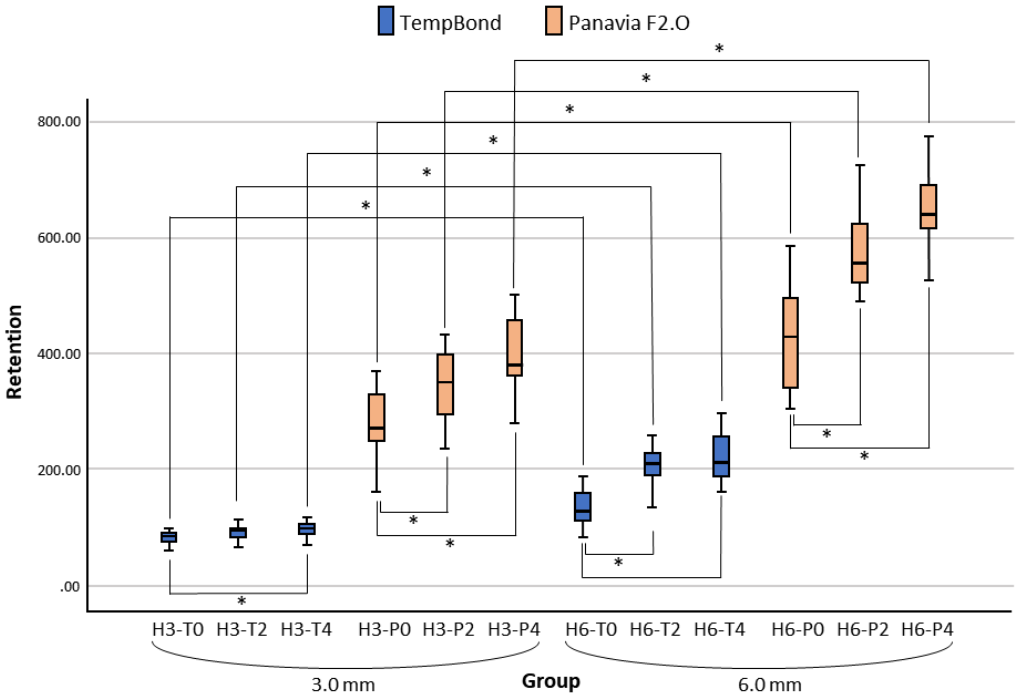

*. This indicates a significant difference in mean force of retention between groups.

Figure 16. Box-plot for all groups based on the mean force of retention.

The result of one-way ANOVA test for Panavia F.20 cement groups also presented significant difference in retention force with use of dimples (P <.001; Table 6). Among the Panavia F2.0 groups, the H3-P2 and H3-P4 groups had a statistically enhanced retentive force compared with the H3-P0 group (P <.05 and P <.001; Table 7), although they were not statistically different from each other (P >.05). When the 6.0-mm abutments were tested, the H6-P2 and H6-P4 groups showed a statistically higher mean retentive force than the H6-P0 group (P <.001). On the other hand, the H6-P2 and H6-P4 groups were not significantly different from each other (P >.05). The significant increase with use of dimples for Panavia F2.0 groups is illustrated in Figure 16.

Table 6. One-way ANOVA test of dimple effects for Panavia F2.0 groups

[Panavia F2.0]	Dimple			F	P-value
Abutment Height	0	2	4		
3	279.43(56.00)[b]	351.17(85.88)[a]	402.49(70.31)[a]	11.124	<.001
6	432.15(91.39)[b]	574.65(71.52)[a]	649.62(100.76)[a]	23.249	<.001

Different lower-case letters indicate a significant difference among mean retentive force Mean(SD), a>b, Post-Hoc; Tukey

Table 7. Multiple comparison of variables with post-hoc Tukey HSD test; abutment height and number of dimples for Panavia F2.0 groups

Cement	Height	Dimple		Sig.	95% Confidence Interval	
					Lower Bound	Upper Bound
[Panavia F2.0]	3mm	Dimple 0	Dimple2	0.024	-135.414	-8.066
			Dimple 4	0.000	-186.734	-59.386
		Dimple 2	Dimple0	0.024	8.066	135.414
			Dimple 4	0.135	-114.994	12.354
		Dimple 4	Dimple0	0.000	59.386	186.734
			Dimple2	0.135	-12.354	114.994
	6mm	Dimple 0	Dimple2	0.000	-221.208	-63.778
			Dimple 4	0.000	-296.182	-138.752
		Dimple 2	Dimple0	0.000	63.778	221.208
			Dimple 4	0.065	-153.688	3.742
		Dimple 4	Dimple0	0.000	138.752	296.182
			Dimple2	0.065	-3.742	153.688

Table 8. Rate of increase between use of different number of dimples

Initial retention (N)		Final retention (N)	Amount of increase (N)	Rate of increase (%)
H3-T0: 81.49	→	H3-T2: 91.14	9.65	11.84
H3-T2: 91.14	→	H3-T4: 96.05	4.91	5.39
H3-T0: 81.49	→	H3-T4: 96.05	14.56	17.87
H6-T0: 133.51	→	H6-T2: 204.01	70.50	52.80
H6-T2: 204.01	→	H6-T4: 221.01	17.00	8.33
H6-T0: 133.51	→	H6-T4: 221.01	87.50	65.53
H3-P0: 297.43	→	H3-P2: 351.17	53.74	18.07
H3-P2: 351.17	→	H3-P4: 402.49	51.32	14.61
H3-P0: 297.43	→	H3-P4: 402.49	105.06	35.32
H6-P0: 432.15	→	H6-P2: 574.65	142.5	32.97
H6-P2: 574.65	→	H6-P4: 649.62	74.97	13.05
H6-P0: 432.15	→	H6-P4: 649.62	217.47	50.32
			Average rate of increase (%)	27.18

The amount of increase in the mean force of retention and its rate of increase between groups were evaluated for both the TempBond and Panavia F2.0 cements, as given in Table 8. The rate of increase in retention force was calculated by the formula presented below (Fig. 17). The lowest rate of increase in the mean force of retention was observed between the H3-T2 and H3-T4 groups (5.39 % increase). The highest rate of increase (65.53 %) in the mean force of retention was observed between the H6-T0 and H6-T4 groups. The average rate of increase was 27.18 %.

$$\% \text{ increase} = \frac{(\text{Final Retention} - \text{Initial Retention})}{\text{Initial Retention}} \times 100\ \%$$

Figure 17. Formula for rate of increase (in percentage) calculation.

3. Effect of abutment height

Changing the height of the titanium abutments also contributed to enhancing the retention force for the cemented Co–Cr alloy crowns. The results of the *t* test showed that when the height of the abutment increased from 3.0 to 6.0 mm for the TempBond groups, there was a significant increase in the mean retentive force, regardless of the number of dimples used (P <.001). Similarly, all Panavia F2.0 groups yielded statistically significant changes in the mean force of retention as the height of the abutment extended from 3.0 to 6.0 mm for the same number of dimples used (P <.001).

Table 9. Results of *t* test of abutment height change for TempBond groups

[TempBond]	Dimple		
Abutment Height	0	2	4
3	81.49(10.12)	91.14(14.09)	96.05(13.56)
6	133.51(33.73)	204.01(44.56)	221.01(44.04)
t	-5.772	-10.182	-10.502
P-value	<.001	<.001	<.001

Table 10. Results of *t* test of abutment height change for Panavia F2.0 groups

[Panavia F2.0]	Dimple		
Abutment Height	0	2	4
3	279.43(56.00)	351.17(85.88)	402.49(70.31)
6	432.15(91.39)	574.65(71.52)	649.62(100.76)
t	-5.519	-7.744	-7.790
P-value	<.001	<.001	<.001

The rate of increase with abutment height change was also calculated with the same formula (Fig. 17). The amount of increase was calculated by subtracting the initial retention from the final retention. The comparison was conducted with the same number of dimples. As shown below, the lowest rate of increase in the mean force of retention was recorded between the H3-P0 and H6-P0 groups (45.29% increase). The highest rate of increase in the mean force of retention was measured between the H3-T4 and H6-T4 groups (130.10% increase; Table 11). The average rate of increase was 81.35 % as the abutment height changed from 3.0 mm to 6.0 mm abutments.

Table 11. Rate of increase between different abutment heights

Initial retention (N)		Final retention (N)	Amount of increase (N)	Rate of increase (%)
H3-T0: 81.49	→	H6-T0: 133.51	52.02	63.84
H3-T2: 91.14	→	H6-T2: 204.01	112.87	123.84
H3-T4: 96.05	→	H6-T4: 221.01	124.96	130.10
H3-P0: 297.43	→	H6-P0: 432.15	134.72	45.29
H3-P2: 351.17	→	H6-P2: 574.65	223.48	63.64
H3-P4: 402.49	→	H6-P4: 649.62	247.13	61.40
			Average rate of increase (%)	81.35

4. Relationship between number of dimples and abutment height

The results of the parametric two-way ANOVA test are presented in Tables 12 and 13. The probability significance was explained by the *P* value. Any values lower than the proposed significance level (*P* =.05) were considered statistically significant. Graphs for the estimated marginal means of retention for both TempBond and Panavia F2.0 cements were also drawn (Figs. 18 and 19).

Table 12. Two-way ANOVA test results for groups cemented by TempBond

[TempBond]	SS	df	MS	F	P-value
Abutment Height	210037.39	1	210037.39	242.02916	< .001
Dimple	43303.948	2	21651.97	24.949887	< .001
Abutment Height*Dimple	22917.56	2	11458.78	13.204122	< .001
error	72896.40	84	867.2		
Total	349155.65	89			

Table 13. Two-way ANOVA test results for groups cemented by Panavia F2.0

[Panavia F2.0]	SS	df	MS	F	P-value
Abutment Height	971319.556	1	971319.56	149.14934	< .001
Dimple	444510.845	2	222255.42	34.128058	< .001
Abutment Height*Dimple	36195.333	2	18097.67	2.778957	> .05
error	547041.25	84	6512.34		
Total	1999066.98	89			

The computed data showed an interactive effect for height and number of dimples when cemented by TempBond (P <.001). The results also supported the fact that the mean retentive force varied statistically with an increasing abutment height for the TempBond groups (P <.001). A statistically significant difference in mean force of retention was also observed as the number of dimples changed when cemented by TempBond (P <.001). For the groups in which Panavia F2.0 cement was used, the height of the abutment and number of dimples did not have an interactive effect (P >.05). Meanwhile, each variable had its own main effect with regard to the recorded mean retentive force (P <.001; Tables 12 and 13).

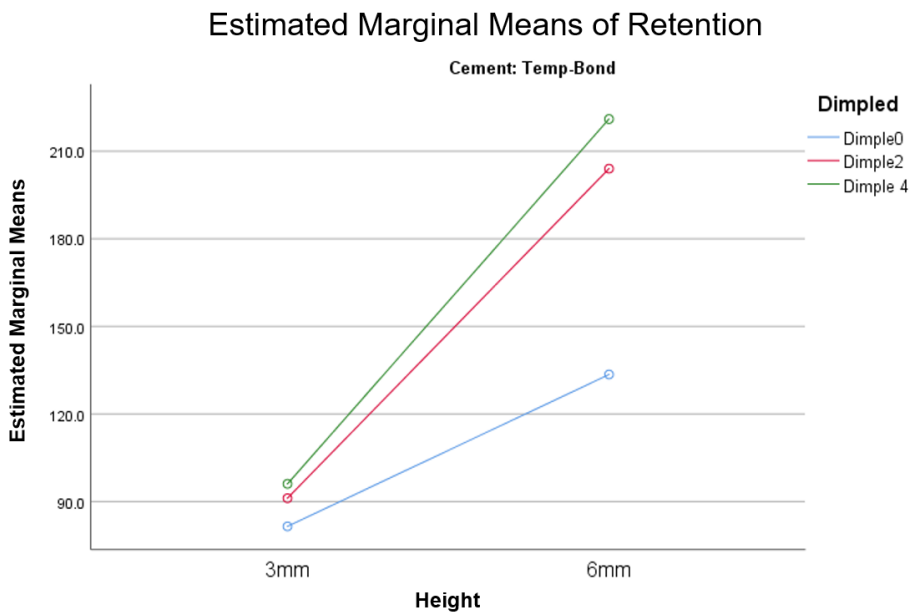

Figure 18. Estimated marginal means of retention for TempBond cement.

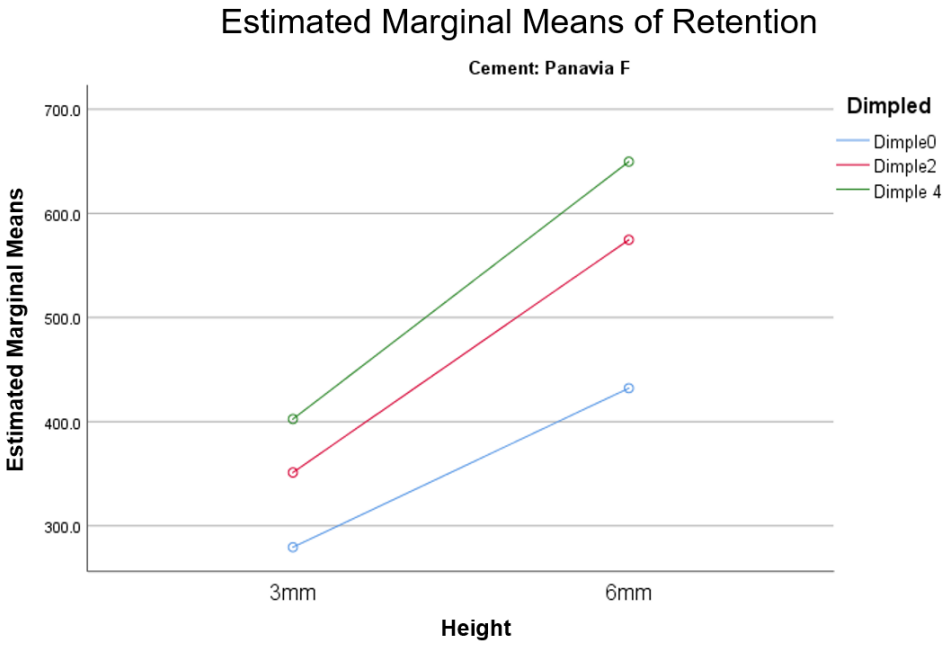

Figure 19. Estimated marginal means of retention for Panavia F2.0 cement.

5. Failure modes of cement

The different modes of cement failures were also evaluated. As shown below, the remnants of the TempBond cements and Panavia F2.0 cements were mostly left attached to the intaglio surface of the Co–Cr alloy crowns, which indicated adhesive failure for the control groups (Figs. 20a-1, 20b-1, 20c-1, 21a-1, 21b-1, and 21c-1). The control groups for both types of cements displayed 100 % of adhesive failure of cement (Table 14).

In all abutments with dimples, mixed failure modes of both adhesive and cohesive failure were visible. Partial thickness of the cement was left inside the Co–Cr alloy crowns, and the rest was filled inside the dimples, denoting a mixed failure (Figs. 20a-2, 20a-3, 20b-2, 20b-3, 20c-2, 20c-3, 21a-2, 21a-3, 21b-2, 21b-3, 21c-2, and 21c-3). Groups with dimples showed over 90 % mixed failure (Table 14). This might explain how the abutments with dimples showed a significantly improved force of retention by increasing the micro-mechanical interlocking between the abutment and the crown.

Table 14. Rate of cement failure between cemented crowns and abutments

Number of Dimples	TempBond		Panavia F2.0	
	Adhesion (%)	Adhesion + Cohesion (%)	Adhesion (%/)	Adhesion + Cohesion (%)
0	30/30= 100%	0/30= 0%	30/30= 100%	0/30= 0%
2	2/30= 6.67%	28/30= 93.33%	2/30= 6.67%	28/30= 93.33%
4	2/30= 6.67%	28/30= 93.33%	1/30= 3.33%	29/30= 96.67%

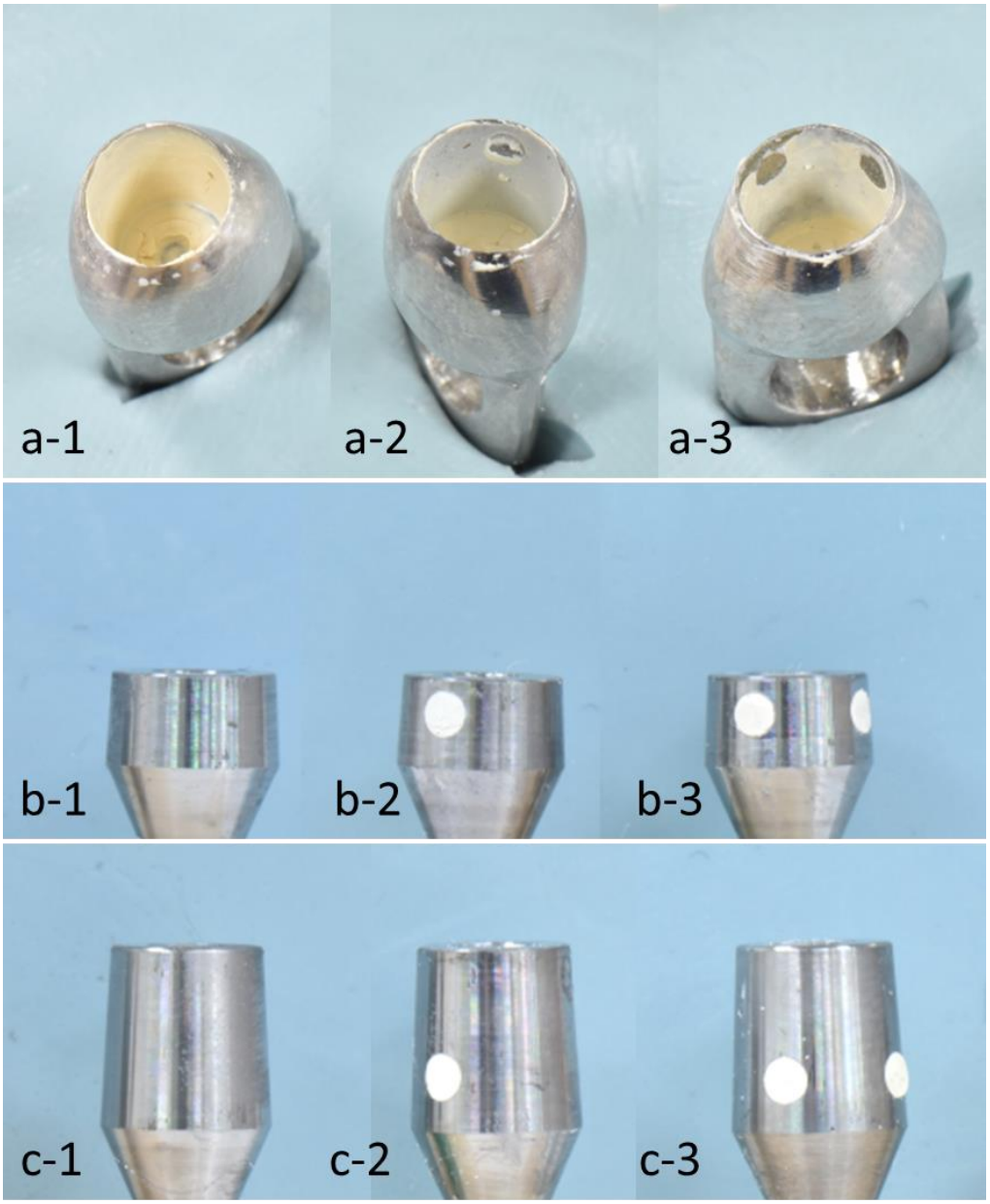

Figure 20. Cement failure modes for TempBond groups (a) Intaglio surface of the dislodged Co-Cr crowns (a-1: no dimple, a-2: 2 dimples, and a-3: 4 dimples) (b) 3.0mm abutments after dislodgement (b-1: no dimple, b-2: 2 dimples, and b-3: 4 dimples) (c) 6.0mm abutments after dislodgement (c-1: no dimple, c-2: 2 dimples, and c-3: 4 dimples)

Figure 21. Cement failure modes for Panavia F2.0 groups (a) Intaglio surface of the dislodged Co-Cr crowns (a-1: no dimple, a-2: 2 dimples, and a-3: 4 dimples) (b) 3.0mm abutments after dislodgement (b-1: no dimple, b-2: 2 dimples, and b-3: 4 dimples) (c) 6.0mm abutments after dislodgement (c-1: no dimple, c-2: 2 dimples, and c-3: 4 dimples)

IV. DISCUSSION

A total of 180 titanium abutments and cement-retained Co–Cr alloy crowns (n = 15) were included in this study. For all groups, 180 retentive forces were recorded (Supplementary Table S1). According to the research conducted, specimens cemented by TempBond displayed a much lower mean force of retention in general (H3-T0: 81.49 ± 10.12; H3-T2: 91.14 ± 14.09; H3-T4: 96.05 ± 13.56; H6-T0: 133.51 ± 33.73; H6-T2: 204.01 ± 44.56; H6-T4: 221.01 ± 44.04) than those cemented by Panavia F2.0 (H3-P0: 279.43 ± 56.00; H3-P2: 351.17 ± 85.88; H3-P4: 402.49 ± 70.31; H6-P0: 432.15 ± 91.39; H6-P2: 574.65 ± 71.52; H6-P4: 649.62 ± 100.76) (Table 2). The results of this research followed similar previous studies showing that self-etching resin cements had greater retentive strength than zinc oxide–eugenol cements.[27–29]

With the satisfaction of normality distribution (Table 3), two-way ANOVA proved that the abutment height and number of dimples resulted in a statistically significant difference in the mean retentive force for cemented Co–Cr alloy crowns (Tables 12 and 13). This was observed for the specimens cemented by both TempBond groups and Panavia F2.0 groups. Therefore, the null hypothesis of this research that the use of dimple shapes on the titanium abutment does not affect the mean retentive force was rejected. In fact, the abutment height and the number of dimples had an interaction effect in changing the mean retentive force for TempBond groups ($P < .001$) but not for Panavia F2.0 groups ($P > .05$; Tables 12 and 13).

The visual representations of the plots of the mean retentive force for each combination of groups of number of dimples and abutment height were plotted

separately in a line graph for TempBond and Panavia F2.0 cement (Figs. 18 and 19). According to the graphs, the four- and two-dimple groups clearly displayed a steeper slope of marginal means of retention from 3.0- to 6.0-mm height than the no dimple groups for TempBond. These nonparallel slope lines of the graph implied that there would be an interaction effect between the abutment height and the number of dimples for the TempBond groups, unlike the Panavia F2.0 groups. Abbo et al. suggested the importance of abutment height with regard to the retentive strength, and the significance level of the abutment height (P <.001) and its effect on the change in the mean retentive forces were supported by this research (Tables 9 and 10).[30] As the rates of increase for changing the abutment length were generally higher than those for using a different number of dimples, increasing the length of the abutment made a greater contribution for enhancing the retention force (Tables 8 and 11).

The significance level of effect within groups was further scrutinized using a post hoc Tukey HSD test for TempBond and Panavia F2.0 (Tables 5 and 7). The box plot diagram shows the mean retentive force as well as the spread value. A significant difference was also noted in the within-group comparison (Fig. 16). For the TempBond groups, the mean retentive force was significantly increased from the H3-T0 to the H3-T4 groups (P <.05) but not for the H3-T2 group (P >.05). This could have been because the 3.0-mm height abutment required at least four dimples, instead of two dimples, on the abutment wall to significantly improve the force of retention. In addition, it was significantly enhanced from the H6-T0 group to the H6-T2 group (P <.001) and the H6-T4 group (P <.001). For the Panavia F2.0 groups, the mean force of retention also increased from the H3-P0 group to the H3-P2 group (P <.05) and H3-P4 group (P <.001).

This significant increase was observed from the H6-P0 to the H6-P2 groups (P <.001) and H6-P4 group (Tables 5 and 7).

For the purpose of this research, the geometry of the implant abutment had to be carefully evaluated. The first factor was the abutment height. Within the same type of cement, an increase in abutment length definitely resulted in a significant increase in the mean force of retention for all groups (Tables 9 and 10). A visual demonstration of significance is illustrated in Figure 16. Previous research showed that with longer abutments, there was a likelihood of greater force of retention when the other conditions stayed the same.[31,32] This was supported for all groups tested in this study. The second factor of the implant abutment was the surface treatment effect. Ajay et al. reported that modifying the surface condition of the implant abutment, such as by sandblasting and bur modification, improved the cement-retained copings.[33] Likewise, Kim et al. showed that applying airborne-particle abrasion on the surface of the implant abutment was an effective way of improving retention of cemented crowns.[34] As this research tested only machined-surface titanium abutments, additional surface treatments may have affected the study results.

Another aspect must be considered is simulating a natural intraoral environment for this in vitro study. In a natural environment, implant-supported crowns experience as much force as natural dentition during the mastication process. Studies have shown that compressive cycling loading significantly reduces the dislodging force after cementation is complete.[35,36] However, this study was set only for thermal cycling between cold and hot baths after cementation, and the role of cycling loading to the cemented crowns could not be evaluated. Furthermore, if a compressive cyclic loading

test was to be performed for this research, the rounded or curved upper part of the crown could have been an obstacle to receive an evenly distributed compressive force . Further research on the effect of changing the mean force of dislodgement along with thermocycling simulation is needed.

Although this research could not cover complex factors of surface treatment on the abutment wall and cyclic loading of compression after the cementation process, the purpose of this study was served efficiently with the use of dimple shapes on the mean retentive force impact. The increase in mean retention force by placing hemispherical dimples was statistically significant from a plain abutment without dimples to two or four dimples on the titanium abutment wall for cement-retained implant-supported crowns.

V. CONCLUSIONS

Within the limitations of this in vitro study, the following conclusions can be stated:

1. The rate of increase in the mean retention force for the abutment height change was higher than the use of dimples regardless of cement types.

2. TempBond-cemented crowns to 3.0-mm abutments with four dimples showed significantly higher retentive force compared to abutments with no dimple. Two dimples on 3.0-mm abutments showed no significant difference compared to abutments with no dimple by TempBond cementation.

3. Panavia F2.0-cemented crowns to 6.0-mm abutments with two and four dimples showed significantly higher retentive force compared to abutments with no dimple. Two and four dimples on 6.0-mm abutments showed no significant difference between each other by Panavia F2.0 cementation.

REFERENCES

1. Duong HY, Roccuzzo A, Stähli A, Salvi GE, Lang NP, Sculean A. Oral health-related quality of life of patients rehabilitated with fixed and removable implant-supported dental prostheses. Periodontol 2000. 2022 Feb;88(1):201-237.

2. Ali Z, Baker SR, Shahrbaf S, Martin N, Vettore MV. Oral health-related quality of life after prosthodontic treatment for patients with partial edentulism: a systematic review and meta-analysis. J Prosthet Dent. 2019 Jan;121(1):59-68.e3.

3. Kurosaki Y, Kimura-Ono A, Mino T, Arakawa H, Koyama E, Nakagawa S, Nguyen HTT, Osaka S, Saeki M, Minakuchi H, Ono M, Maekawa K, Kuboki T. Six-year follow-up assessment of prosthesis survival and oral health-related quality of life in individuals with partial edentulism treated with three types of prosthodontic rehabilitation. J Prosthodont Res. 2021 Aug 21;65(3):332-339.

4. Schmitt A, Zarb GA. The longitudinal clinical effectiveness of osseointegrated dental implants for single-tooth replacement. Int J Prosthodont 1993;6:197-202.

5. Adell R, Lekholm U, Rockler B, Brånemark PI. A 15-year study of osseointegrated implants in the treatment of the edentulous jaw. Int J Oral Surg 1981;10:387-416.

6. Haas R, Mensdorff-Pouilly N, Mailath G, Watzek G. Branemark single tooth implants: a preliminary report of 76 implants. J Prosthet Dent 1995;73:274-9.

7. Hamed MT, Abdullah Mously H, Khalid Alamoudi S, Hossam Hashem AB, Hussein Naguib G. A systematic review of screw versus cement-retained fixed implant supported reconstructions. Clin Cosmet Investig Dent. 2020 Jan 14;12:9-16.

8. Sailer I, Mühlemann S, Zwahlen M, Hämmerle CH, Schneider D. Cemented and screw-retained implant reconstructions: a systematic review of the survival and complication rates. Clin Oral Implants Res. 2012 Oct;23 Suppl 6:163-201.

9. Chee W, Jivraj S. Screw versus cemented implant-supported restorations. Br Dent J. 2006; 201: 501–507.

10. Linkevicius T, Vindasiute E, Puisys A, Peciuliene V. The influence of margin location on the amount of undetected cement excess after delivery of cement-retained implant restorations. Clin Oral Implants Res. 2011 Dec;22(12):1379-84.

11. Pauletto NP, Lahiffe BJ, Newton JN. Complications associated with excess cement around crowns on osseointegrated implants: a clinical report. Int J Oral Maxillofac Implants 1999; 14: 865-868.

12. Nematollahi F, Beyabanaki E, Alikhasi M. Cement selection for cement-retained implant-supported prostheses: a literature review. J Prosthodont. 2016 Oct;25(7):599-606.

13. Ma S, Fenton A. Screw- versus cement-retained implant prostheses: a systematic review of prosthodontic maintenance and complications. Int J Prosthodont. 2015 Mar-Apr;28(2):127-45.

14. Manawar, A., Dhanasekar, B., Aparna, I., & Naim, H. Factors influencing success of cement versus screw-retained implant restorations: a clinical review. Journal of Osseointegration, 2012; 4(3), 43–47.

15. Hebel KS, Gajjar RC. Cement-retained versus screw-retained implant restorations: achieving optimal occlusion and esthetics in implant dentistry. J Prosthet Dent. 1997 Jan;77(1):28-35.

16. Farzin M, Torabi K, Ahangari AH, Derafshi R. Effect of abutment modification and cement type on retention of cement-retained implant supported crowns. J Dent (Tehran). 2014 May;11(3):256-62.

17. Lopes ACO, Machado CM, Bonjardim LR, Bergamo ETP, Ramalho IS, Witek L, Coelho PG, Bonfante EA. The effect of CAD/CAM crown material and cement type on retention to implant abutments. J Prosthodont. 2019 Feb;28(2):e552-e556.

18. Jalil G, Mohammad RN, Farid S, Seyyed MA. The effect of abutment surface roughness on the retention of implant-supported crowns cemented with provisional luting cement. JDMT, Volume1, Number1, September 2012.

19. Sahu N, Lakshmi N, Azhagarasan NS, Agnihotri Y, Rajan M, Hariharan R. Comparison of the effect of implant abutment surface modifications on

retention of implant-supported restoration with a polymer based cement. J Clin Diagn Res. 2014 Jan;8(1):239-42.

20. Badawi H, Aboushady Y, Azer A. Effect of circumferential and axial grooves on the retention of provisionally cement-retained implant-supported crowns (in vitro study). Alexandria Dental journal. 2015 Vol.40 pages:208-213.

21. Lewinstein I, Block L, Lehr Z, Ormianer Z, Matalon S. An in vitro assessment of circumferential grooves on the retention of cement-retained implant-supported crowns. J Prosthet Dent. 2011 Dec;106(6):367-72.

22. Chan KC, Hormati AA, Boyer DB. Auxiliary retention for complete crowns provided by cement keys. J Prosthet Dent. 1981 Feb;45(2):152-5.

23. O'Kray H, Marshall TS, Braun TM. Supplementing retention through crown/preparation modification: an in vitro study. J Prosthet Dent. 2012 Mar;107(3):186-90.

24. Hanusz, Z, Tarasińska, J. Normalization of the kolmogorov–smirnov and shapiro–wilk tests of normality. Biometrical Letters, vol.52, no.2, 2015, pp.85-93.

25. Kim HY. Statistical notes for clinical researchers: two-way analysis of variance (ANOVA)-exploring possible interaction between factors. Restor Dent Endod. 2014 May;39(2):143-7.

26. Kim HY. Statistical notes for clinical researchers: post-hoc multiple comparisons. Restor Dent Endod. 2015 May;40(2):172-6.

27. Dudley JE, Richards LC, Abbott JR. Retention of cast crown copings cemented to implant abutments. Aust Dent J. 2008 Dec;53(4):332-9.

28. Rohr N, Brunner S, Märtin S, Fischer J. Influence of cement type and ceramic primer on retention of polymer-infiltrated ceramic crowns to a one-piece zirconia implant. J Prosthet Dent. 2018 Jan;119(1):138-145.

29. Bishti S, Siouri J, Wolfart S, Tuna T. Retention forces of implant-supported single crowns and fixed dental prostheses after cementation: an in-vitro study. Oral. 2022;2(1).

30. Abbo B, Razzoog ME, Vivas J, Sierraalta M. Resistance to dislodgement of zirconia copings cemented onto titanium abutments of different heights. J Prosthet Dent. 2008;99(1):25–9

31. Kirman EA, Asar NV, Erdem B, Turkyilmaz I. Effects of abutment length and platform size on the retention of implant-supported CAD/CAM crowns using six different cements. J Dent Sci. 2022 Jan;17(1):601-603.

32. Alaa Abou-O, Reem Al-K. Effect of abutment height and cement thickness on the retention of cement-retained implant- supported restorations. Adv Dent & Oral Health. 2018; 9(4): 555767.

33. Ajay R, Suma K, Ali SA, Kumar Sivakumar JS, Rakshagan V, Devaki V, Divya K. Effect of surface modifications on the retention of cement-retained implant crowns under fatigue Loads: an in vitro study. J Pharm Bioallied Sci. 2017 Nov;9(Suppl 1): S154-S160.

34. Shrivastav M. Effect of surface treatments on the retention of implant-supported cement-retained bridge with short abutments: An in vitro comparative evaluation. J Indian Prosthodont Soc. 2018 Apr-Jun;18(2): 154-160.

35. Ongthiemsak C, Mekayarajjananonth T, Winkler S, Boberick KG. The effect of compressive cyclic loading on retention of a temporary cement used with implants. J Oral Implantol. 2005;31(3): 115-20.

36. Alvarez-Arenal A, Gonzalez-Gonzalez I, deLlanos-Lanchares H, Brizuela-Velasco A, Pinés-Hueso J, Ellakuria-Echebarria J. Retention strength after compressive cyclic loading of five luting agents used in implant-supported prostheses. Biomed Res Int. 2016; 2016: 2107027.

SUPPLEMENTS

Table S1. Recorded forces of retention for all groups (in Newtons)

3.0mm Abutment				6.0mm Abutment			
Temp-Bond		Panavia F.		Temp-Bond		Panavia F.	
Group 1 H3-T0		**Group 4 H3-P0**		**Group 7 H6-T0**		**Group 10 H6-P0**	
Trial 1	77.2	Trial 1	209.2	Trial 1	175	Trial 1	431.2
Trial 2	82.9	Trial 2	272.4	Trial 2	91.4	Trial 2	540.4
Trial 3	94.9	Trial 3	330.2	Trial 3	165	Trial 3	586.1
Trial 4	72.5	Trial 4	161	Trial 4	184.3	Trial 4	424.5
Trial 5	60.5	Trial 5	239.1	Trial 5	129.6	Trial 5	317.4
Trial 6	88.1	Trial 6	302.5	Trial 6	89.7	Trial 6	320.7
Trial 7	83.6	Trial 7	259	Trial 7	122.6	Trial 7	411.9
Trial 8	69.8	Trial 8	262.7	Trial 8	152	Trial 8	330.2
Trial 9	84.9	Trial 9	346.2	Trial 9	115.6	Trial 9	464.7
Trial 10	71.2	Trial 10	369.1	Trial 10	137.3	Trial 10	352
Trial 11	96.3	Trial 11	261.7	Trial 11	126.4	Trial 11	541.8
Trial 12	87.4	Trial 12	236.1	Trial 12	187.3	Trial 12	304.8
Trial 13	82.1	Trial 13	329.6	Trial 13	135.3	Trial 13	463.5
Trial 14	93.3	Trial 14	326.4	Trial 14	83.2	Trial 14	501.8
Trial 15	77.6	Trial 15	286.3	Trial 15	108	Trial 15	491.3
MEAN	81.49	MEAN	279.43	MEAN	133.51	MEAN	432.15
Group 2 H3-T2		**Group 5 H3-P2**		**Group 8 H6-T2**		**Group 11 H6-P2**	
Trial 1	76.2	Trial 1	283.7	Trial 1	134	Trial 1	686.4
Trial 2	88.3	Trial 2	415	Trial 2	212.2	Trial 2	645

Trial 3	77.3	Trial 3	235.7	Trial 3	220.8	Trial 3	490
Trial 4	83.4	Trial 4	254.6	Trial 4	193.7	Trial 4	556.3
Trial 5	86.6	Trial 5	404.2	Trial 5	223.1	Trial 5	612.5
Trial 6	98.7	Trial 6	351.3	Trial 6	186.3	Trial 6	635.3
Trial 7	100.5	Trial 7	387.8	Trial 7	253.4	Trial 7	725.1
Trial 8	111.3	Trial 8	238.7	Trial 8	257.6	Trial 8	540.6
Trial 9	64.8	Trial 9	342.2	Trial 9	182.4	Trial 9	493.1
Trial 10	89.7	Trial 10	322.5	Trial 10	203.7	Trial 10	541.2
Trial 11	96.9	Trial 11	352.3	Trial 11	231.4	Trial 11	529.6
Trial 12	121.3	Trial 12	302.4	Trial 12	107.9	Trial 12	513.3
Trial 13	83.4	Trial 13	382.8	Trial 13	231.8	Trial 13	512.8
Trial 14	92.7	Trial 14	561.4	Trial 14	224.3	Trial 14	556.7
Trial 15	96	Trial 15	433	Trial 15	197.5	Trial 15	581.8
MEAN	91.14	MEAN	351.17	MEAN	204.01	MEAN	574.65
Group 3 H3-T4		**Group 6 H3-P4**		**Group 9 H6-T4**		**Group 12 H6-P4**	
Trial 1	105.7	Trial 1	330.2	Trial 1	214.1	Trial 1	874.3
Trial 2	76.9	Trial 2	488.6	Trial 2	168.9	Trial 2	592.1
Trial 3	67.8	Trial 3	498.3	Trial 3	255.6	Trial 3	701.3
Trial 4	80.2	Trial 4	357.4	Trial 4	233.3	Trial 4	550.3
Trial 5	88.5	Trial 5	367.8	Trial 5	163.4	Trial 5	680.7
Trial 6	90.2	Trial 6	310	Trial 6	271.6	Trial 6	710
Trial 7	102.8	Trial 7	454.2	Trial 7	198.1	Trial 7	641.2
Trial 8	92.4	Trial 8	501.3	Trial 8	196.4	Trial 8	848.8
Trial 9	108	Trial 9	369.7	Trial 9	240.1	Trial 9	527.6
Trial 10	111.2	Trial 10	460.2	Trial 10	210.8	Trial 10	630.3

Trial 11	98.2	Trial 11	376.5	Trial 11	258.4	Trial 11	563.5
Trial 12	97.3	Trial 12	412.1	Trial 12	160.7	Trial 12	591.6
Trial 13	107.3	Trial 13	381.9	Trial 13	296.7	Trial 13	621.5
Trial 14	98.1	Trial 14	278.9	Trial 14	174.6	Trial 14	624.7
Trial 15	116.2	Trial 15	450.3	Trial 15	272.5	Trial 15	586.4
MEAN	96.05	MEAN	402.49	MEAN	221.01	MEAN	649.62

-국문 초록-

시멘트 유지형 임플란트 보철 수복물에서 티타늄 임플란트 지대주의 반구형 딤플의 유지력 효과

서울대학교 대학원 치의과학과 치과보철학 전공

(지도교수 허 성 주)

최 정 훈

목 적 : 본 연구의 목적은 CAD/CAM 밀링으로 제작한 티타늄 임플란트 지대주에 반구 형태의 딤플로 기계적인 유지를 형성하여 시멘트 유지형 보철물 접착 시 유지력 변화에 대해 알아보는 것이다. 본 연구의 귀무가설은 시멘트 유지형 임플란트 보철물에서 지대주 벽에 딤플 모양을 사용했을 때 평균적인 유지력에 차이가 없다는 것으로 설정하였다.

방 법 : 총 180개의 시편을 12개의 그룹 (n=15)으로 나누어 6.0 도의 수렴각을 가진 3.0 mm와 6.0 mm 길이의 임플란트 지대주 (Warentec, Seoul, Korea)를 티타늄 밀링 머신을 통해 제작하였다. 실험군은 2개의 딤플을 지대주의 마

주보는 쪽에 위치시킨 그룹과 4개의 딤플을 지대주에 동일한 간격으로 배치한 그룹으로 나누었다. 딤플은 반구 형태의 함몰된 구조로 1.5 mm의 직경과 0.75 mm의 깊이를 가지며 지대주의 치은 상방 1.0 mm 위치에 모두 동일하게 위치시켰다.

대조군은 딤플이 없는 3.0 mm와 6.0 mm의 티타늄 지대주를 각각 E4 스캐너 (3Shape, Copenhagen, Denmark)를 이용하여 스캔하였으며, 시멘트 유지형 임플란트 보철물은 Exocad 프로그램 (GmbH, Darmstadt, Germany) 상에서 제작하였다. 내면값은 모두 동일하게 50 μm으로 부여하였으며, 접착 후 유지력 검사를 위해 보철물 상부에 5.0 mm 직경의 후크가 통과할 수 있는 관통형 구조물을 함께 형성하였다. 보철물 제작 방법으로는 EOSINT M270 (EOS GmbH Electro Optical Systems, Krailling, Germany) 장비를 통해 레이저 신터링 방식으로 코발트-크롬 소재로 제작하였다. 제작된 보철물은 통법으로 연마 과정을 거쳤으며, 내면은 4.0 기압 하 50 μm 알루미나로 5 초간 샌드블라스팅 및 세척 후 건조시켰다.

동일한 제조업체 (Warentec, Seoul, Korea)에서 생산된 4.3 mm 직경의 임플란트 아날로그를 아크릴릭 레진 블록에 심었으며 30 N/cm으로 티타늄 나사를 이용해 지대주를 고정하였다. 고정 후 티타늄 나사 상방에 cotton pallet을 삽입한 뒤 Fermit (Ivoclar Vivadent AG, Schaan, Switzerland)을 이용해 지대주 상방까지 충전하고 광조사기로 20 초간 광중합 하였다.

접착에 사용된 시멘트 중 첫 번째는 산화아연-유지놀 계 시멘트인 TempBond

(Kerr, Salerno, Italy)와 레진 계 시멘트인 Panavia F2.0 (Kuraray, Fujimoto, Japan)이었다. 접착된 시편은 5 kg의 하중으로 10 분간 압착하였으며, 잉여 시멘트는 치과용 익스플로러를 이용해 제거하였다. 이후 구강 내 온도 변화를 재현하기 위해 열처리를 진행하였다. 30 초씩 5 ° C 와 55 ° C 의 냉온 수조에 반복하여 잠기도록 하였고 총 10,000 회 시행하였다.

이후 Universal testing machine (TW-D102, Tae-Won Tech CO., Seoul, Korea) 장비를 활용하여 5.0 mm/min의 속도로 접착된 보철물을 치아 장축으로 당겨 임플란트 지대주로부터 보철물이 완전히 탈거되는데 필요한 힘의 양을 기록하였다. 유지력 측정을 통해 한 그룹당 15회의 결과값을 기록하였다.

기록된 모든 데이터는 SPSS 프로그램 (IBM SPSS Inc., Chicago, IL, USA)을 사용하여 정규분포 만족도 (α = 0.05)를 우선적으로 검정하였으며, 이후 Two-way ANOVA test와 post-hoc Tukey HSD test를 통해 지대주 길이의 변화와 딤플의 형성 유무에 따른 유지력 차이가 발생하는지 통계적으로 분석 시행하였다.

결 과 : 수집된 데이터는 모두 정규분포를 만족하였고, two-way ANOVA 테스트 결과, 사용된 접착제의 종류와 무관하게 임플란트 지대주의 길이 변화와 딤플 형성으로 평균적인 유지력 차이는 통계적으로 유의하게 나타났다 (P<.001). Post-hoc Tukey HSD 검정을 통해 대조군인 딤플이 없는 임플란트 지대주에 비해 딤플이 형성된 그룹에서 통계적으로 유의하게 더 높은 평균

유지력이 관찰되었으며 (P<.001), 동일한 딤플 수를 가진 그룹 간에 비교 시, 임플란트 지대주의 길이가 3.0 mm에서 6.0 mm로 증가하였을 때의 평균 유지력 또한 통계적으로 유의하게 증가함이 관찰되었다 (P<.001). 시멘트의 파절 양상은 딤플이 없는 그룹에서는 시멘트 대부분이 크라운 내면에 잔존하여 접착성 파절 (adhesive failure) 양상이 관찰되었으며, 딤플이 있는 그룹에서는 크라운 내면에서의 접착성 파절 (adhesive failure)과 딤플 내부의 응집성 파절 (cohesive failure)로 인해 혼합성 파절 (mixed failure) 양상 이 관찰되었다.

결 론 : 통계적 분석을 통해 본 연구의 귀무가설은 기각되었으며, 본 연구의 한계 내에서 다음과 같은 결론을 내릴 수 있었다.

1. 지대주의 길이가 3.0 mm에서 6.0 mm로 늘어날 때의 평균 유지력 증가율은 TempBond와 Panavia F2.0 시멘트 모두 딤플을 사용할 때의 증가율 보다 더 높았다.

2. 3.0 mm 지대주에 TempBond로 접착된 크라운은 4개의 딤플을 형성한 경우 딤플이 없는 지대주보다 통계적으로 우수한 유지력을 보였다. 3.0 mm 지대주에 TempBond로 접착된 크라운은 2개의 딤플을 형상한 경우 딤플이 없는 지대주보다 통계적으로 유의미한 유지력 차이를 보이지 않았다.

3. 6.0 mm 지대주에 Panavia F2.0으로 접착된 크라운은 2개와 4개의 딤플을 형성한 경우 딤플이 없는 지대주보다 통계적으로 우수한 유지력을 보였다.

6.0 mm 지대주에 Panavia F2.0으로 접착된 크라운은 2개와 4개의 딤플을 형성한 지대주 간에 유의미한 유지력 차이를 보이지 않았다.

주요어 : 치과용 임플란트, 임플란트 보철물, 임플란트 지대주, 유지력
학 번 : 2020-33414