RAPID ACQUISITION OF PN SIGNALS FOR DS/SS SYSTEMS EMPLOYING A PHASE ESTIMATOR

Suwon Kang and Yong-Hwan Lee

School of Electrical Engineering, Seoul National University
Kwanak-P.O. Box 34, Seoul, 151-742, Korea
TEL: +82-2-880-7281
e-mail: water@trans.snu.ac.kr

Abstract – We propose a scheme for rapid acquisition of PN signals for direct-sequence spread spectrum (DS/SS) CDMA systems by estimating the phase of the incoming PN signal with the use of an auxiliary signal. The phase of the incoming PN signal is estimated using the cross-correlation properties between the PN signal and the auxiliary signal. The estimated phase is used to initialize the phase of the local PN code generator. A conventional serial search scheme is used to detect phase alignment. The performance of the proposed acquisition scheme is analytically evaluated in terms of the mean acquisition time. Results show that the proposed scheme can significantly reduce the acquisition time.

I. INTRODUCTION

The acquisition of PN sequence, that synchronizes the phase of the local PN sequence with that of the transmitter, is an important part of a DS/SS receiver [1]. There have been proposed several acquisition schemes that employ various kinds of alignment detection and search strategies in the literature [2]. Serial search schemes with fixed-dwell time are most widely used and their performance has been studied extensively [3][4][5].

When *a priori* information on the phase of the incoming PN code is not available, a serial search scheme needs to examine the entire uncertain region until phase alignment is detected. If information on the phase of the incoming PN code is available, however, the acquisition time can significantly be reduced by starting the search from the most probable region and expanding to less probable region [6]. A closed-loop acquisition system has been proposed using an auxiliary signal, where the phase of the local PN signal is recursively updated based on cross-correlation between the incoming signal and the auxiliary signal [7]. Recently, the auxiliary signal has been applied to obtain the phase estimate of the incoming PN signal [8]. In this paper, we propose a rapid acquisition scheme by employing the phase estimator proposed in [8] and analyze the acquisition performance in terms of the mean acquisition time.

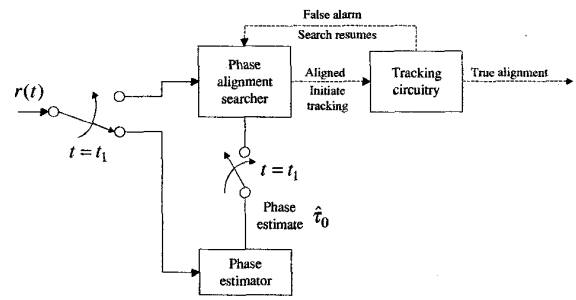

Figure 1: Block diagram of the proposed acquisition system.

In Section II, we describe the proposed acquisition scheme employing the phase estimator. The performance of the proposed acquisition scheme is analyzed in terms of the mean acquisition time in Section III. To verify the performance of the proposed scheme, simulation results are compared with the analytical results in Section IV.

II. THE PROPOSED ACQUISITION SYSTEM

Fig. 1 depicts the proposed acquisition scheme employing the phase estimator proposed in [8] and phase alignment searcher. The proposed scheme first estimates the phase of the incoming PN signal $r(t)$ by using the phase estimator based on the observation from $t = 0$ to $t = t_1$. When a phase estimate is obtained at $t = t_1$, the phase alignment searcher starts to search the true phase alignment using a conventional single-dwell serial search scheme where the initial phase of the local PN code generator is set to the value obtained by the phase estimator.

The Phase estimator

Assuming no data modulation and coherent carrier demodulation during the acquisition process, the base-

0-7803-5565-2/99/$10.00 © 1999 IEEE

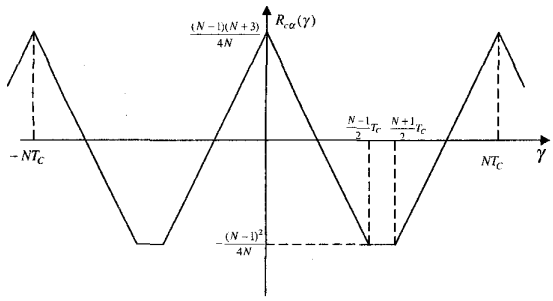

Figure 2: The cross-correlation function $R_{c\alpha}(\gamma)$.

band equivalent representation of an incoming PN signal can be given by

$$r(t) = \sqrt{P}c(t - \tau_0) + n(t) \tag{1}$$

where P is the average signal power, τ_0 is the phase of the incoming PN signal, $n(t)$ is zero mean additive white Gaussian noise with two-sided spectral density $\frac{N_0}{2}$ and $c(t)$ is the PN signal represented by

$$c(t) = \sum_{k=-\infty}^{\infty} c_k P_{T_C}(t - kT_C). \tag{2}$$

Here c_k denotes the kth chip of a binary PN sequence periodic with period N and $P_{T_C}(t)$ is a unit-amplitude rectangular pulse having a duration of the chip time interval T_C. We assume that $\{c_k\}$ is an m-sequence.

The auxiliary signal $\alpha(t)$ used in [7] is defined by

$$\alpha(t) = \sum_{i=-\frac{N-3}{2}}^{\frac{N-3}{2}} \left(\frac{N-1}{2} - |i|\right) c(t - iT_C) \tag{3}$$

and the cross-correlation between $c(t)$ and $\alpha(t)$ is depicted in Fig. 2. It can be seen that the cross-correlation between the incoming PN signal and the auxiliary signal can provide information on the phase difference between the reference PN signal and the incoming signal.

A block diagram of the phase estimator proposed in [8] is depicted in Fig. 3. The incoming signal $r(t)$ is correlated with the auxiliary signal $\alpha(t)$ using J correlators in parallel for an interval of LNT_C to yield a_j's, where L is an integer. By letting

$$\begin{aligned} I_1 &= \sum_{j=0}^{J-1} a_j \cos\frac{2\pi jM}{N} \\ Q_1 &= \sum_{j=0}^{J-1} a_j \sin\frac{2\pi jM}{N}, \end{aligned}$$

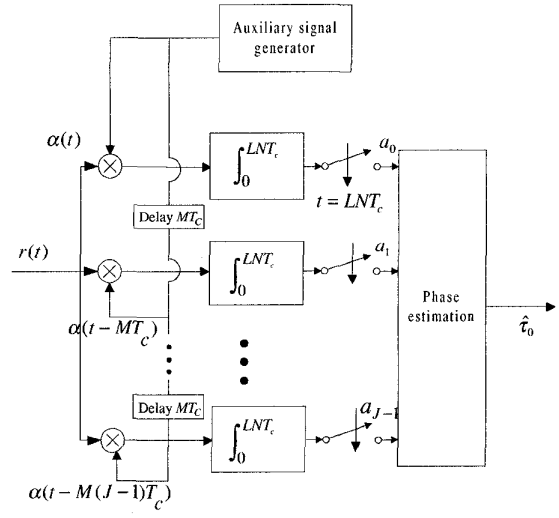

Figure 3: A block diagram of the phase estimator.

an approximate ML phase estimate $\hat{\tau}_0$ of the incoming PN signal can be obtained by [8]

$$\hat{\tau}_0 = \frac{NT_C}{2\pi}(2\pi m - \phi_1 - \delta_1). \tag{4}$$

where

$$\begin{aligned} \phi_1 &= \tan^{-1}(Q_1/I_1) \\ \delta_1 &= \begin{cases} 0, & \text{if } I_1 > 0 \\ \pi, & \text{otherwise} \end{cases} \end{aligned}$$

and m is an integer such that $\hat{\tau}_0 \in [0, NT_C)$.

The Phase Alignment Searcher

The phase alignment searcher of the proposed scheme can rapidly find out true phase alignment from the phase estimate obtained by the phase estimator. When the phase estimate $\hat{\tau}_0$ is obtained at time $t = LNT_C$, it is first quantized with respect to the phase update step ΔT_C to yield $\tilde{\tau}_0$. The normalized phase update step Δ is usually set to a value of 1, $\frac{1}{2}$ or $\frac{1}{4}$. Note that there are $\frac{N}{\Delta}$ phases to examine for each period of the PN signal. The quantized phase estimate $\tilde{\tau}_0$ is used to initialize the local PN code generators.

To achieve rapid acquisition, two serial search schemes are employed in parallel, each of which consists of a phase alignment detector and a PN code generator. The phase of each PN code generator is updated in opposite direction to each other from the initial phase $\tilde{\tau}_0$. The alignment detector in the serial search scheme correlates $r(t)$ with the local PN signal for a fixed interval of N_D chips and makes a decision by comparing the correlator output with a threshold ε.

When a phase alignment is declared by one of the serial search schemes, the tracking circuitry starts fine

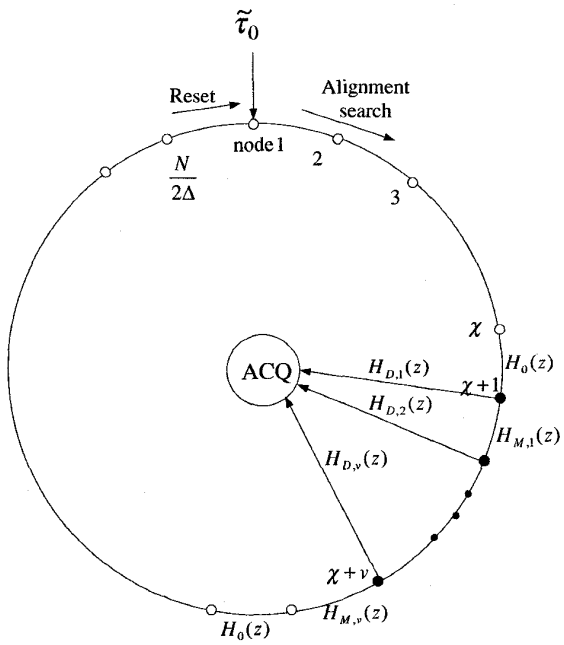

Figure 4: Flow graph diagram of the proposed acquisition scheme

synchronization process. Otherwise, the phases of the serial search schemes are updated and phase alignment search continues. If a phase alignment is simultaneously declared by both of the serial search schemes, the PN signals of two PN code generators are applied to the tracking circuitry one after another for verification. When all $\frac{N}{\Delta}$ phases have been checked without a phase alignment detection, the phase alignment search is repeated with the phases of the two PN code generators reset to the initial phase $\tilde{\tau}_0$ until a correct phase alignment is found.

III. PERFORMANCE ANALYSIS

The acquisition of PN sequences is to set the phase of the local PN code phase ξT_C to that of the incoming PN code ζT_C within the lock range of the tracking circuitry. Assuming that the lock range of the tracking circuitry is $\pm T_C$, acquisition is achieved in the case when the absolute phase offset is less than T_C, *i.e.*, $|\delta| \triangleq |\zeta - \xi| \leq 1$. The phase alignment detection problem can be modeled as testing a simple hypothesis against a simple alternative one. Let H_1 be the hypothesis that $|\delta| < 1$ and H_0 be the alternative hypothesis that $|\delta| > 1$. When the phase of the local PN code generator is updated by ΔT_C, there can exist up to $\frac{2}{\Delta}$ or $(\frac{2}{\Delta} - 1)$ phases corresponding to hypothesis H_1 [5].

To analyze the performance of the proposed acquisition scheme, we employ the flow graph diagram technique used in [3]. Assuming that the phase difference between the initial phase of the local PN code generator $\tilde{\tau}_0$ and the closest H_1 phase is $\chi\Delta T_C$ and there are v H_1 phases, the flow graph diagram of the acquisition scheme can be depicted as in Fig. 4, where the alignment search proceeds clockwise from node 1 and the kth node represents the two phases, $\tilde{\tau}_0 \pm (k-1)\Delta T_C$, being checked by the two serial search schemes. A node marked by an open circle represents a H_0 node where none of the two phases is in hypothesis H_1. On the other hand, a node marked by a solid circle represents a H_1 node, in which one of the two phases is in hypothesis H_1. Note that nodes where both of the two phases are in hypothesis H_1 can exist since there are more than one H_1 phases. However, we neglect such cases since $\frac{N}{\Delta} \gg v$ in general.

Let P_F and $T_D(= N_D T_C)$ denote the false alarm probability and the dwell time of the phase alignment detector, respectively. In a H_0 node, there are three possible detection cases by the two alignment detectors: no false detection by the two alignment detectors with probability $(1-P_F)^2$, one false detection with probability $2P_F(1-P_F)$, two false detections with probability ${P_F}^2$. Assuming the penalty time due to a false detection is K_P times the dwell time, the time spent for the three cases are T_D, $(K_P+1)T_D$ and $(2K_P+1)T_D$, respectively. Thus, the branch gain out of a H_0 node can be written as

$$\begin{aligned} H_0(z) &= (1-P_F)^2 z^{T_D} + 2P_F(1-P_F) z^{(K_P+1)T_D} \\ &\quad + {P_F}^2 z^{(2K_P+1)T_D}. \end{aligned} \tag{5}$$

The branch gain from the ith H_1 node to the next H_1 or H_0 node corresponding to a miss detection, $H_{M,i}(z)$, can be obtained by considering the following two cases: a phase alignment detector testing H_0 hypothesis declares a false phase alignment or not, while the other detector misses H_1 hypothesis. Since the time spent for the two cases are $(1+K_P)T_D$ and T_D, respectively, $H_{M,i}(z)$ can be given by

$$H_{M,i}(z) = (1-P_{D,i})\left[(1-P_F)z^{T_D} + P_F z^{(K_P+1)T_D}\right] \tag{6}$$

where $P_{D,i}$ represents the true detection probability of the alignment detector in the ith H_1 node. The branch gain from the ith H_1 node to acquisition corresponding to true detection, $H_{D,i}(z)$, can be obtained from the following three cases: detection without false alarm, detection before false alarm and detection after false

alarm. Thus, it follows that

$$H_{D,i}(z) = P_{D,i}\left[(1-P_F)z^{T_D} + \frac{1}{2}P_F(z^{T_D} + z^{(K_P+1)T_D})\right] \tag{7}$$

To simplify the expression, all the H_1 nodes can be aggregated into one *collective* H_1 node which has branch gain $H_D(z)$ for true detection and $H_M(z)$ for miss detection given by [5]

$$H_M(z) = \prod_{i=1}^{v} H_{M,i}(z) \tag{8}$$

$$H_D(z) = \sum_{i=1}^{v} H_{D,i}(z) \prod_{j\geq 1}^{i-1} H_{M,j}(z) \tag{9}$$

The transfer function of the flow graph diagram in Fig. 4 can be obtained by

$$P_{ACQ,\chi}(z) = G(z){H_0}^{\chi}(z) \tag{10}$$

where $G(z)$ represents the loop gain from the H_1 node to the acquisition given by

$$G(z) = \frac{H_D(z)}{1 - H_M(z){H_0}^{u-1}(z)}, \tag{11}$$

and u denotes the total number of nodes after the aggregatino of H_1 nodes equal to $\frac{N}{2\Delta} - v + 1$. Letting $p(\chi)$ be the probability that the node $(\chi+1)$ is the first H_1 node, the transfer function is given by

$$P_{ACQ}(z) = \sum_{n=0}^{u-1} P_{ACQ,\chi}(z)p(\chi) \tag{12}$$

and the mean alignment search time $\bar{T}_S$ can be obtained by

$$\bar{T}_S = \left.\frac{\partial P_{ACQ}(z)}{\partial z}\right|_{z=1} \tag{13}$$

Using the result that

$$H_0(1) = 1, \left.\frac{dH_0(z)}{dz}\right|_{z=1} = (1 + 2K_P P_F)T_D$$

and $G(1) = 1$, it can be shown that

$$\bar{T}_S = (1 + 2K_P P_F)T_D E\{\chi\} + \left.\frac{dG(z)}{dz}\right|_{z=1} \tag{14}$$

where $E\{\chi\} = \sum_{\chi=0}^{u-1} \chi p(\chi)$. In order to analytically calculate $E\{n\}$, the pdf $p(\chi)$ needs to be expressed in a closed form. Due to the nonlinearity included in the estimation process, it is not easy to obtain $p(\chi)$ analytically. Instead, we can empirically obtain $p(\chi)$ by computer simulation. Note that when phase estimator is not used, $E\{\chi\}$ is equal to $\frac{N}{4\Delta}$.

Since it takes $(1 + 2K_P P_F)T_D$ to pass a single H_0 node and $E\{\chi\}$ is the average number of H_0 nodes to go over before reaching the first H_1 node, it can be seen that the first term in (14) is the average time spent for reaching the first H_1 node. This time can be reduced by the proposed phase estimator at the cost of the phase estimation time LNT_C. The second term is the average time to reach acquisition on the condition that the alignment search starts from the H_1 node, which depends only upon the parameters of the phase alignment searcher, not on those of the phase estimator.

Including the time for phase estimation, the total mean acquisition time of the proposed system is given by

$$\bar{T}_{acq} = LNT_C + \bar{T}_S. \tag{15}$$

As L increases, the phase estimator uses more periods of the received PN signal yielding more accurate phase estimate, which results in smaller $E\{\chi\}$. The optimum value of L, L_{opt}, can be determined so as to minimize $\bar{T}_{acq}$.

IV. NUMERICAL RESULTS

To verify the performance analysis in Section III, we use m-sequences generated by the polynomial $h(x) = x^{10} + x^7 + 1$ and three correlation branches for phase estimation, *i.e.*, $J = 3$. We evaluate acquisition performance when $\Delta = 1$ and $\frac{1}{2}$, assuming that the chip timing is set to the worst condition. For the phase alignment detector, the dwell time T_D is fixed to a value of $256T_C$ and the penalty time for a false phase alignment detection is set to $20T_D$ or $50T_D$.

Fig. 5 and Fig. 6 show the mean acquisition time of the conventional acquisition scheme and the proposed acquisition scheme as a function of the threshold value when the chip signal-to-noise ratio is set to the value of -10dB and $\Delta = 1$ or $\frac{1}{2}$, where solid lines and symbols represent the analytical results from (15) and the simulation results, respectively and the normalized threshold ε' is equal to $\varepsilon/(\sqrt{P}T_C)$. It is assumed that the conventional scheme uses the same phase alignment searcher that employed in the proposed system. The mean acquisition time of the proposed scheme is obtained at $L = L_{opt}$. It can be seen that the simulation results agree well with the analytical results and the performance of the proposed scheme is less dependent upon the parameters of the phase alignment searcher, ε' and Δ, than that of the conventional scheme.

Note that the performance improvement over the conventional scheme becomes larger as ε' decreases.

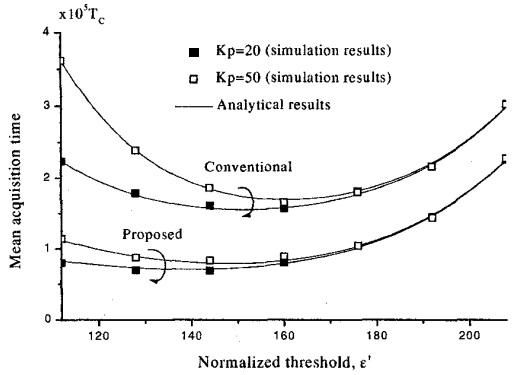

Figure 5: Mean acquisition time when $\Delta = 1$.

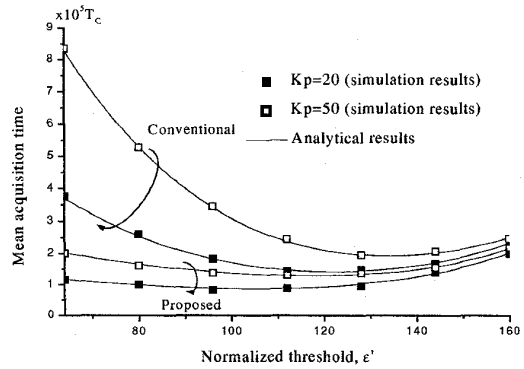

Figure 6: Mean acquisition time when $\Delta = \frac{1}{2}$.

This can be explained as follows: As ε' decreases, it can easily be seen that both the detection probabilities $P_{D,i}$'s and the false detection probability P_F increase. The higher $P_{D,i}$'s, the larger the probability that the phase alignment searcher achieves acquisition in its first sweep. Hence, the mean acquisition time given in (14) becomes approximately equal to $(1 + 2K_P P_F)T_D E\{\chi\}$, which means that most of the alignment search time is the time spent for reaching the H_1 node in the flow graph diagram given in Fig. 4. Since K_P and T_D are fixed and the proposed scheme has smaller $E\{\chi\}$ than the conventional scheme, it can be seen that the mean acquisition time reduction becomes larger as P_F increases. As ε' increases, the opposite situation happens, since $P_{D,i}$'s and P_F decrease. In addition, it can be seen in the figures that the mean acquisition time becomes less dependent upon K_P since P_F decreases as ε' increases.

V. CONCLUSION

In this paper, we have proposed a rapid PN acquisition scheme by employing a PN code phase estimator. The proposed scheme first estimates the phase of the incoming PN signal by the phase estimator proposed in [8] and then rapidly finds out true phase alignment by starting the phase alignment search from this phase estimate. The mean acquisition time of the proposed scheme has been analyzed using the flow graph diagram method and compared to that of a conventional scheme. Numerical results show that the proposed scheme shows significant performance improvement over a conventional one.

REFERENCES

(1) R. Pickholtz, D. Schilling, and L. Milstein, "Theory of Spread-Spectrum Communications - A Tutorial," *IEEE Trans. Commun.*, Vol. COM-30, pp. 855-884, May 1982.

(2) M. K. Simon, J. K. Omura, R. A. Scholtz, and B. K. Levitt, *Spread Spectrum Communications Handbook, Revised Edition*, New York: McGraw Hill, 1994.

(3) J. K. Holmes and C. C. Chen, "Acquisition Time Performance of PN Spread- Spectrum Systems," *IEEE Trans. Commun.*, Vol. COM-25, pp. 778-783, Aug. 1977.

(4) D. M. DiCarlo and C. L. Weber, "Statistical Performance of Single-Dwell Serial Synchronization Systems," *IEEE Trans. Commun.*, Vol. COM-28, pp. 1382-1388, Aug. 1980.

(5) A. Polydoros and C. L. Weber, "A Unified Approach to Serial Search Spread- Spectrum Code Acquisition - Part I & II," *IEEE Trans. Commun.*, Vol. COM-32, pp. 542-560, May 1984.

(6) A. Weinberg, "Generalized Analysis for the Evaluation of Search Strategy Effects on PN Acquisition Performance," *IEEE Trans. Commun.*, Vol. COM-31, pp. 37-49, Jan. 1983.

(7) M. Salih and S. Tantaratana, "A Closed-Loop Coherent Acquisition Scheme for PN sequences Using an Auxiliary Sequence," *IEEE J. Select. Areas Commun.*, Vol. 14, pp. 1653-1659, Oct. 1996.

(8) S. Kang, Y.-H. Lee and S. Tantaratana, "Rapid Acquisition of PN Signal for DS/SS Systems Based on Phase Estimation of the Incoming PN Signal," *Proc. ICT '98*, Vol. 2, pp. 242-246, June 1998.